2025

BROWARDHEALTH IMPERIAL POINT

PROJECT 17

SPECIFICATIONS MANUAL

RMS
ROOFING & WATERPROOFING
CONSULTANTS

Summary

BROWARD HEALTH IMPERIAL POINT

PROJECT 17 2025

ROOFS 9, 10, A1, A2, A3

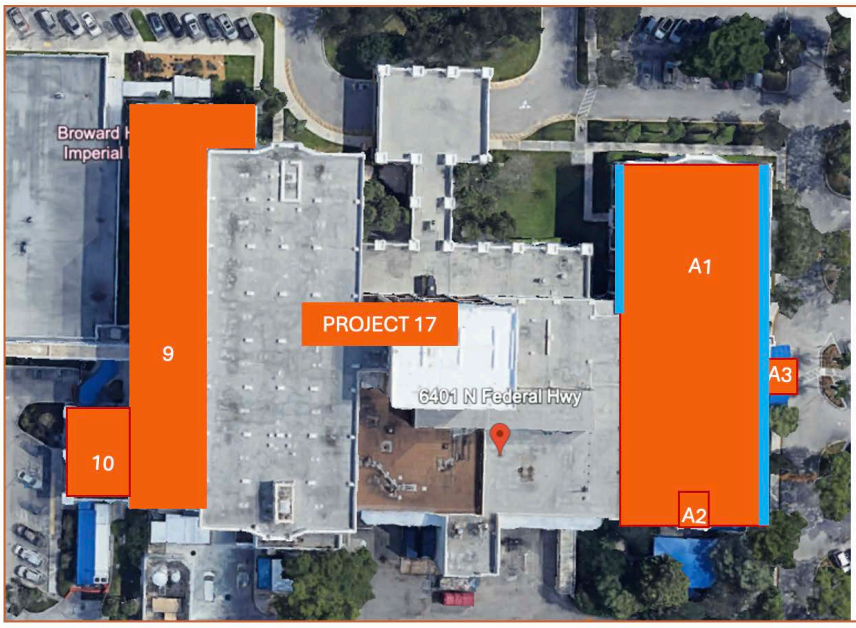

COMPONENT	TYPE	REQUIRED	ATTACHMENT
NORTH AND SOUTH ENDS OF ROOF A1	METAL	SECUREROCK	MECHANICALLY FASTENED
DECK	CONCRETE AND DUROCK	FTR SA- PRIMER	ROLLED APPLIED
INSULATION	NEW LWC R-20	1/8 MINIMUM SLOPE TO DRAIN	POURED IN PLACE
ROOF MEMBRANE	FIBERTITE 36 MIL FB KEE	ONE (1) PLY	ADHERED WITH ICR POLYSET CRA
FLASHING MEMBRANE	FIBERTITE 36 MIL KEE	ONE(1) PLY	ADHERED WITH FTR - 190e
LIQUID FLASHING	FORTY LOCK LIQUID APPLIED FLASHING		LIQUID APPLIED
WARRANTY	FULL SYSTEM UNLIMITED WARRANTY/ NDL LABOR AND MATERIAL	TWNENTY (20) YEARS	-

1. The following considerations are part of the Scope of Work Summary

    a. Roofing contractors are responsible for bringing the existing equipment up to code

    b. Installation of new lightning protection system should be included in the base bid.

    c. Do not include the cost of engineering for permitting. It will be provided to the selected contractor.

    e. Deck A1 has two sections of metal deck approximately four (4) feet wide as illustrated in the Summary Cover Page picture. These sections will require the installation of mechanically fastened Secure rock prior to the installation of the vapor barrier as preparation for the LWC pour.

    f. For any unusual type of roof penetration or flashing, please consider the use of Forty Lock Liquid applied flashing and accessories.

    g. For roof sections 9 and 10 must be accessed from the outside of the hospital. Consider scaffolding as an acceptable mean to access the roof.

    h. For roof sections A1 and A2, the access can be through the stairwell that has exterior access. Roofs A3, the access will be from the outside of the hospital.

    i. All metal should be FiberTite Metal

    j. All detail drawings are for illustration purposes only

    k. No retrofit drains are allowed.

    l. No weekend work anticipated at this time. Weekend work can only be performed prior authorization by Broward Health

    m. Rain days are to be reported the same day of the inclement weather event

Scope of Work

SECTION 07 54 16

FULLY ADHERED KEE SINGLE PLY ROOFING SYSTEM

PART 1 GENERAL

1.1 REFERENCES

A. ASTM International (ASTM): Current Edition
   1. ASTM D6754 - Standard Specification for Ketone Ethylene Ester Based Sheet Roofing.
   2. ASTM C473 - Standard Test Methods for Physical Testing of Gypsum Panel Products.

B. American Society of Civil Engineers (ASCE): Current Edition
   1. ASCE 7 - Minimum Design Loads for Buildings and Other Structures.

C. Factory Mutual (FM): Current Edition
   1. FM Standard 4470 - Single-Ply, Polymer-Modified Bitumen Sheet, Built-Up Roof (BUR) and Liquid Applied Roof Assemblies for use in Class 1 and Noncombustible Roof Deck Construction.
   2. Loss Prevention Data Sheets 1-28, 1-29.

D. Florida Building Code, High Velocity Hurricane Zone.

E. Miami-Dade Product Control Section: Notice of Acceptance (NOA).

1.2 RELATED SECTIONS

A. SECTION 03 52 16 – Lightweight Insulating Concrete Roof Decks

B. SECTION 07 56 00 – FiberTite Liquid PMMA Secondary Waterproofing

C. SECTION 07 71 00 – Roof Specialties

1.3 SUBMITTALS

A. Submit under provisions of Project Administrative Requirements.

B. Product Data:
   1. Storage and handling requirements and recommendations by the roofing manufacturer.
   2. Dimensioned shop drawings, including roof plan detailing perimeter enhancement, flashing methods, terminations and acceptance by roofing manufacturer.
   3. Safety Data Sheets (SDS) relating to all products, chemicals and solvents.

C. Shop Drawings: Include details of materials, construction and finish. Include relationship with adjacent construction.

D. Warranty: Specimen warranty from roofing manufacturer with project name and street address included on the document.

1.4 QUALITY ASSURANCE

A. The roofing systems shall be installed only by a roofing contractor authorized by the specified roofing manufacturer.

B. Roofing contractor's key personnel shall have received specialized training by the roofing manufacturer.

C. FiberTite Roofing Systems shall be installed in accordance with the most current guide specifications and details as amended or authorized by the roofing manufacturer for specific project requirements.

D. A quality assurance inspection of the roof system shall be performed by the roofing manufacturer for acceptance and approval. This inspection shall be performed upon completion and certification by the Contractor that the roofing system has reached one hundred (100) percent completion.

1.5 COORDINATION

A. Prior to installation of materials, a pre-roofing conference shall be held with the roofing contractor and Owner or Owner's Representatives to discuss the specified roofing system, coordinate its proper application and the expectations of all parties involved. The authorized roofing contractor and the Owner's representative shall notify all parties prior to the meeting.

1.6 DELIVERY, STORAGE, AND HANDLING

A. Deliver all materials to the job site in manufacturer's original, unopened containers, with legible labels and in sufficient quantity to allow for continuity of work.

B. Store and handle in strict compliance with manufacturer's written instructions and recommendations.

C. Materials, having been determined by the Owner's representative to be damaged, shall be immediately removed from the construction site and replaced at no cost to the Owner.

1.7 JOB CONDITIONS

A. Safety:
   1. Take precautions regarding worker health and safety when using solvents, adhesives.
   2. Worker safety is paramount.
   3. Comply with OSHA requirements for roof construction and fall protection.

B. Protection:
   1. Provide proper protection on newly completed roofing.
   2. Protect walls, rooftop units, windows and other components during installation.

C. Additional Precautions:
   1. Daily production schedules shall be limited to what can be made one hundred (100) percent watertight at the end of each day, including flashing and night seals.

1.8 DESIGN CONDITIONS

A. Florida Building Code (FBC) System Approvals
   1. Concrete and Steel Decks with LWIC: Fully Adhered KEE to Lightweight Insulating Concrete
      a. FBC FL4930-R28, System LWC-15
   2. Steel Decks with LWIC: Mechanically Attached KEE to Steel Deck
      a. FBC FL4930-R28, System S-380
   3. Concrete deck, Non-Insulated: Fully Adhered KEE to Structural Concrete Deck
      a. FBC FL4930-R28, System C-231

B. Florida Building Code, High Velocity Hurricane Zone(HVHZ).

C. Energy Star: Roof System shall comply with the initial and aged reflectivity required by the U.S. Federal Government's Energy Star program.

D. LEED: Roof system shall meet the reflectivity and emissivity criteria to qualify for one point under the LEED credit category, SSc7.2, Heat Island Effect - Roof.

1.9 WARRANTY

A. Upon Inspection and Acceptance by the roofing manufacturer will issue the preauthorized warranty, subject to the terms and conditions of the specimen warranty and contract documents.
   1. Warranty Type:
      a. Full System No Dollar Limit (NDL) Material and Labor Warranty
   2. Time Period:
      a. Twenty (20) year warranty.
   3. Maintenance Requirements:
      a. Include instructions detailing preventative maintenance requirements by the building Owner and noting a list of harmful substances that may damage the FiberTite membrane.
      b. Include contact name, phone number and email address of the manufacturer local technical representative that approves the warranty.

PART 2 PRODUCTS

2.1 MANUFACTURERS

A. Basis of Design: FiberTite, Seaman Corporation

B. Substitutions: Roofing manufacturer must comply in all respects to the specified roofing membrane compliance standards to be considered for equivalency.

C. Requests for substitutions will be considered in accordance with provisions of this Section and Product Requirements.

2.2 MEMBRANE

A. Standards Compliance: ASTM D6754, Current Edition, Standard Specification for Ketone Ethylene Ester (KEE) Sheet Roofing.

B. Field Membrane:
   1. FiberTite 36 mil FB: Nominal thirty-six (36) mil ketone ethylene ester (KEE) membrane reinforced with knitted polyester fabric and heat bonded four (4) ounce polyester fleece backing, with Cool Roof Gray (DC671) color.
      a. Approved Fleeceback Membrane Adhesives to lightweight concrete and non-insulated structural concrete decks:
         1) ICP Polyset Commercial Roof Adhesive(CRA), formerly CR-20.

C. Flashing Membrane:
   1. FiberTite 36 mil: Nominal thirty-six (36) mil ketone ethylene ester (KEE) membrane reinforced with knitted polyester fabric, with Cool Roof Gray (DC671) color.
      a. Approved Bareback Flashing Adhesive
         1) FTR-190e: VOC compliant solvent borne, contact (two-sided) bonding adhesive, for bonding non-fleece back FiberTite membranes to properly prepared and preauthorized horizontal and vertical substrates.

2.3 ACCESSORY MATERIALS

A. Fasteners:
   1. Securing membranes steel decks.
      a. FiberTite MAGNUM Series: No. 15, buttress threaded, No. 3 Phillips head fastener constructed of case-hardened carbon steel with a reduced diameter drill point and corrosion resistant coating.
   2. Securing membranes to structural concrete decks at penetrations and drains.
      a. FiberTite HD No. 14, buttress threaded, No. 3 Phillips head fastener constructed of case-hardened carbon steel with a reduced diameter drill point and corrosion resistant coating.

B. FTR Stress Plates: Used for steel deck roof sections mechanical attachment and to anchor membranes at penetrations and roof drains on concrete decks.
   1. FTR Magnum R275: Barbed Round Stress Plate; 20 gauge galvanized steel.

C. Additional Accessory Components:
   1. All membrane accessories to match the Cool Roof Gray (DC671) field membrane color.
   2. Flashing Terminations Sealant: FTR-101. Single-component gun-grade polyether.
   3. Fabricated Metal Flashing: .040 Aluminum FiberClad Metal. Forty-eight (48) x one hundred twenty (120) inch sheets.
   4. FTR Pre-molded Flashings: Injection molded vent stack, split Wrapid Flash and inside and outside corner flashing using FiberTite vinyl compound.
   5. FTR Non-Reinforced Membrane: Field fabrication membrane, sixty (60) mil non-reinforced vinyl membrane.
   6. Walkway and Protection Pads: FTR Tuff Trac Yellow high-grade walkway and protection material with slip-resistant design.
   7. FTR Termination Bar: Membrane flashings restraint and terminations. 0.125 x 1 x 120 inch extruded aluminum bar with pre-punched slots, eight (8) inches on center.
   8. FiberTite Seam Cleaner: Seam and field membrane cleaner used prior to welding.
   9. FTR Cover Strips: 36mil XT 6” x 100’ stripping for end laps of fleece back rolls
   10. FTR SLS Sealant: Single -component self-leveling polyether sealant for pitch pans.
   11. Forti-lock PMMA Flashing System by FiberTite, Seaman Corporation.
   12. FiberTite Large Pre-flashed One-Way Lightweight Insulating concrete vents.
   13. FiberTite Fascia: .040 Aluminum, Standard Color.
   14. FiberTite Surface Mount Counterflashings: .040 Aluminum, Standard Color.
   15. FiberTite Coping Cap: .040 Aluminum, Standard Color
   16. FiberTite Expansion Joint Cap: .040 Aluminum, Standard Color

2.4 VAPOR RETARDER

A. Vapor Retarder Direct to Structural Concrete and Thermal Barrier for Steel Deck
   1. Modified SBS Base Sheet:
      a. FiberTite VaporTite SBS Self-Adhering membrane.
   2. Primer:
      a. FiberTite SA Primer.

2.5 RELATED MATERIALS

A. Wood Nailers: No. 2 or better construction grade lumber.
   1. Installation of other types of treated lumber should be verified with a design professional and manufacturer representative.

2.6 COVER BOARD

A. Products must be pre-approved in writing by Seaman Corporation and comply with minimal characteristics and classification listed for the products below:
   1. Thermal Barrier for Steel Decks with LWC: Approved Gypsum Core Cover Board:

ASTM C473

a. Securock Cement Board by USG

1) Minimum thickness five-eighths (5/8) inch.

2) Maximum four (4) feet by four (4) feet in dimension.

2. Wall Flashing Substrate: Approved Gypsum Core Cover Board: ASTM C473

a. Securock Gypsum Fiber, by USG

1) Minimum thickness one-quarter (1/4) inch.

2) Maximum four (4) feet by four (4) feet in dimension.

PART 3 EXECUTION

3.1 GENERAL

A. Authorized Roofing Contractor: Ensure strict compliance with manufacturer guide specifications for installation of roofing membrane systems.

1. Provide suitable substrate for proper installation of roofing system, roof insulation and specified components.
2. Coordinate installation ensuring system remains watertight at end of each working day.

B. Application of roofing materials constitutes an agreement that roofing contractor inspected and found the substrate suitable for installation of roofing system.

3.2 SUBSTRATE PREPARATION

A. Roofing Contractor: Verify the deck condition or existing roof construction is suitable for the specified installation.

B. Examine surfaces for inadequate anchorage, low areas that will not drain properly, foreign material, wet insulation, unevenness, or any other defect which would prevent the proper execution and quality application roofing system as specified.

C. Prepared substrate shall be smooth, dry, and free of debris or any other irregularities which would interfere with proper installation.

D. Adhesives will not bond to wet, damp or inadequately cured materials.

E. Do not proceed with any part of the application until all defects and preparation work have been corrected and complete.

F. Removal of Existing Roof Systems:

1. Remove all existing roofing materials including all insulation to the structural decks, including all flashings, metal and deteriorated wood blocking and legally dispose off-site.
2. Remove only enough roofing to accommodate the day's work and ensure the exposed area can be made one hundred (100) percent watertight at the end of the day or first sign of inclement weather.

G. Steel Decks Repair:

1. Rotted or deteriorated decking shall be removed and replaced with like kind.
2. Areas of structurally acceptable steel decking exhibiting slight surface rust shall be properly cleaned, primed and painted prior to installing the approved insulation.
3. All decking shall be inspected for proper attachment and excessive deflection that would compromise the uplift performance of the new fully adhered roofing system.
4. Attachment and deflection deficiencies shall be repaired and brought into compliance with current, local building code requirements.

H. Structural Concrete Repair:

1. Deteriorated decking shall be repaired or replaced with appropriate materials according to standard industry regulations and practices.
2. Repair any depressions or areas where reinforcing has become exposed.
3. The application of adhesives directly to structural concrete or temporary roofing requires priming prior to application.
4. When insulation system is to be installed using an approved adhesive.
    a. Cracks and or camber differentials greater than 3/16 inch shall be repaired using an appropriate cementitious grout or fill and feathered to promote a smooth transition.
    b. All surface irregularities shall be leveled to ensure complete contact with the decking for insulation bonded in approved adhesives.

3.3 THERMAL BARRIER INSTALLATION

A. General:
1. Thermal barrier boards shall be installed whereby the long dimension of the boards run in parallel alignment and the short dimensions are staggered.
2. Insulation and coverboards shall be installed with minimum joint dimensions and shall be tightly butted where possible. The maximum joint widths shall be 0.375 inch. Damaged corners shall be cut out and replaced with an insulation piece a minimum of twelve (12) x twelve (12) inches. Pieces that are cut from larger panels and are smaller than one square foot are not acceptable.
3. Install no more than can be covered during the same working day.
4. At the end of each working day, provide a watertight cover on all unused insulation as to avoid moisture penetration.

B. Mechanical Attachment of Thermal Barrier to steel deck:
1. Gypsum thermal barrier board shall be applied to or installed over properly prepared and preapproved substrates, free of any debris, dirt, grease, oil or moisture.
2. All fasteners and stress plates for the mechanical attachment of thermal barrier board materials shall be fasteners as provided by Manufacturer or approved by Manufacturer and Authority Having Jurisdiction(AHJ).
3. All fasteners and stress plates shall be FM approved for mechanical attachment of insulation and comply with FM Standard 4470 for corrosion resistance.
4. Thermal barrier boards require fasteners and stress plates mechanically fastened to the steel deck according to ASCE 7-22.
5. Fasteners shall be installed straight, tight and perpendicular to the decking complying with minimum penetration requirements of specific deck types. Do not over torque fasteners.
6. Fasteners shall be installed using depth sensing tool attachments to ensure proper installation.

3.4 VAPOR RETARDERS

A. General:
1. Approved vapor retarder shall be applied only to properly prepared and preapproved substrates.
2. Install no more than can be covered or made one hundred (100) percent watertight during the same working day.
3. Vapor retarders shall be installed starting at the low point of the roof deck.
4. Vapor retarder shall be side lapped, a minimum of three (3) inches and properly shingled to shed water to the roof drains.

B. Vapor and Thermal Barrier
1. Prime all concrete decks and thermal barrier installed over steel decks with SA Primer at a rate recommended on the Product Data Sheet by the roofing system Manufacturer.

2. Install one (1) ply of self-adhering vapor barrier to a cleaned and primed concrete deck and thermal barrier as recommended by the roofing system Manufacturer.
3. Shingle in direction of slope of roof to shed water on each area of roof to primary drainage.

3.5 LIGHTWEIGHT INSULATING CONCRETE ROOF DECK

1. Lightweight Insulating Cellular Concrete (LWIC), shall be installed by trained applicators, approved in writing by the LWIC Manufacturer.
2. LWIC shall be installed in strict accordance with the LWIC Manufacturer's installation requirements and standard industry practices.
3. The newly installed LWIC shall be protected from the intrusion of free water and rain infiltration.
4. Intruded water must be removed prior to the installation of the new FiberTite Roofing System. Consult the appropriate LWIC manufacturer for methodology.
5. The LWIC shall be installed to provide positive slope and subsequent positive drainage of the new FiberTite Roofing System.
6. Finished LWIC shall be a minimum thickness of two and one-quarter (2.25) inches, properly cured, dried and tested prior to the installation of the new roofing System.
7. Finished surfaces shall be treated with sodium silicate or Poly-Vinyl Alcohol (PVA) per LWIC manufacturer recommendations to ensure uniform curing and surface hardness.
8. It shall be the Authorized Contractor's responsibility to ensure that the LWIC is properly installed and complies with this specification. The application of roofing system Manufacturer materials constitutes the Contractors acceptance of the LWIC system.
9. All LWIC decks shall be vented using one-way breather vents; large opening vents, greater than six (6) inch diameter, shall be installed at a rate of one (1) vent per one thousand five hundred (1,500) square feet and small opening vents, less than six (6) inch diameter shall be installed at a rate of one (1) vent per one thousand (1,000) square feet of installed membrane.
10. Roof vents shall be approved by the Manufacturer Technical Customer Service, installed and flashed in strict accordance with Manufacturer recommendations.

3.6 WOOD NAILERS

A. Install pressure treated lumber at same heights as insulation layer or adjacent construction plus or minus one-quarter (1/4) inch. Install continuous treated wood nailers at all perimeters, around roof projections and penetrations as shown in approved details.

B. Wood Nailers Installed Directly on the Substrate: Carefully examine substrates to confirm the entire area provides a suitable fastening surface. Repair defects by appropriate trades prior to installation.

C. Nailers: Installed and anchored in such a manner to resist a force of two hundred fifty (250) pounds per linear foot, of wood blocking in any direction.

D. Nailers along parapets, curbs and expansion joints are recommended for insulated decking.

3.7 INSTALLATION OF MEMBRANES - GENERAL

A. Quality Control:
1. It is the responsibility of the roofing contractor to initiate and maintain a Quality Control program to govern all aspects of the installation.
2. The project foreman and or supervisor will be responsible for the daily execution of the Quality Control program which will include but is not limited to the supervision, inspection and probing of all heat welded seams incorporated within roofing system.
3. If inconsistencies in quality of the application of the composite, membrane or welds are found, work shall cease until corrective actions are taken to ensure the continuity

the installation.

B. General:
1. Coordinate work ensuring that sequencing of installation promotes a one hundred (100) percent watertight installation at the end of each day.
2. Roofing systems to be designed in accordance with ASCE Standard 7, current edition.
3. Restrictions regarding outside ambient air temperature are relative only to the exposure limits of the workers or adhesives when necessary.
4. Curing or drying time of the adhesive will be affected by ambient temperatures and must be taken into consideration.
5. Humidity can affect the drying time of solvent borne adhesives or cause condensation to form on the newly applied adhesive.
6. No moisture may be present on the adhesives prior to mating or application of membranes.
7. Adhered membrane systems are to be broomed in place first and then completed by pressing the membrane into the adhesive with a weighted, foam-covered lawn roller or fifty (50) lb linoleum roller. Lawn rollers should be filled with between six (6) and eight (8) gallons of water.
8. Roofing systems shall only be installed over properly prepared and sound substrates, free from excessive surface roughness, dirt, debris and moisture.

3.8 MEMBRANE FULLY ADHERED - ALL DECK TYPES

A. Spatter Applied Polyurethane Foam
1. FiberTite Fleece Back Membrane Adhered in Spatter Applied Adhesive:
a. For all fleece back membranes, unroll and position two rolls over the properly installed and prepared substrate.
b. Ensure rolls are straight and the minimum three (3) inches overlap between rolls is maintained.
c. Fold the membrane back in the long direction, half way upon themselves to expose the substrate and the underlying polyester fleece backing.
d. Apply continuous spatter pattern of polyurethane adhesive to the substrate between the sheets of membrane, dispensing the adhesive in a spattered pop-corn spray pattern.
e. Spatter pattern shall achieve a nominal eighty (80) percent coverage of textured coating at approximately one-quarter (1/4) of an inch nominal thickness. The balance of the substrate will get coated as the adhesive spreads during the brooming and rolling process.
f. Avoid spattering the back of the fleece-back membrane.
g. Do not allow adhesive to contaminate membrane overlaps. For example, use a sheet of insulation board to mask the spray area if required along adjoining membrane areas.
h. Clean overspray immediately with acetone while the adhesive is still wet.
i. Fold and maneuver the fleece back membrane into the wet adhesive, (approximate open time for the adhesive is five (5) to ten (10) minutes depending on environmental conditions) avoiding wrinkles or air pockets in the fleece back membrane.
j. Broom the membrane into the wet adhesive and complete the bonding process by firmly pressing the bonded membrane into place with a weighted, fifty (50) pound linoleum roller or a fifty (50) pound weighted, foam covered lawn roller.
k. Repeat the process for the remaining unbonded portion of the membrane, lapping subsequent, adjacent rolls of membrane a minimum three (3) inches, ensuring proper shingling of the membrane to shed water along the laps.
l. No adhesive shall be applied to the lap seam areas of the membrane. Areas contaminated with adhesive require a membrane patch or strip.
m. Polyurethane foam adhesive is designed for use only when the substrate and

ambient temperatures are a minimum thirty-two (32) degrees F and rising and the adhesive components are at least seventy (70) degrees F.

n. Do not use bad or marginal adhesives. Contact Manufacturer if quality of the adhesive is suspect.

3.9 Membrane Mechanically Attached to Steel Decks

A. Roofing Membrane Mechanically Attached Through Lightweight Concrete to Steel Deck

1. Perimeter enhancement fastening of Zones 2 and 3 will be required according to FBC System S-380 to comply with steel decking requirements.
2. Closed lap assemblies are required to be fastened through the top side of the field membrane, through the lightweight insulating concrete, vapor and thermal barriers, to engage with the steel deck a minimum penetration of one (1) inch to the steel deck.
3. Fastener row spacing, and intervals shall be established to resist design pressures, determined in compliance with procedures outlined within the current publication of ASCE 7-22 and FBC HVHZ.
4. Rows of fasteners using a Closed Lap through the top of the membrane system within the perimeter at prescribed intervals area and sealing with a six (6) inch stripping membrane.

3.10 Welding of Membrane Laps

A. Heat Welding:

1. General:
   a. Field seams exceeding ten (10) feet in length shall be welded with an approved automatic welder.
   b. Field seams must be clean and dry prior to initiating any field welding.
   c. Remove foreign materials from the seams including dirt and oils with Acetone or authorized alternative.
   d. Use clean white cotton cloths and allow approximately five (5) minutes for solvents to dissipate before initiating the automatic welder. Do not use denim or synthetic rags for cleaning.
   e. Welding shall be performed only by qualified personnel to ensure the quality and continuity of the weld.
   f. Contaminated areas within a seam will inhibit proper welding and will require a membrane patch or strip.

2. Hot Air Hand Welding:
   a. The lap or seam area of the membrane may be intermittently tack welded to hold the membrane in place.
   b. The back interior edge of the membrane shall be welded first, with a thin, continuous weld to concentrate heat along the exterior edge of the lap during the final welding pass.
   c. The nozzle of the hand-held hot air welder shall be inserted into the lap at a forty-five (45) degree angle to the lap. Once the polymer on the material begins to flow, a hand roller shall be used to apply pressure at a right angle to the tip of the hand welder. Properly welded seams shall utilize a one and one-half (1.5) inch wide nozzle, to create a homogeneous weld, a minimum of one and one-half (1.5) inch in width.
   d. Smaller nozzles may be used for corners, and other field detailing, maintaining a minimum one (1) inch weld.

3. Automatic Hot Air Machine Welding:
   a. Proper welding of the FiberTite Membrane can be achieved with a variety of automatic welding equipment.
   b. Follow all manufacturers' instructions for the safe operation of the automatic

welder.

c. Follow local code requirements for electric supply, grounding and surge protection.

d. The use of a dedicated, portable generator is highly recommended to ensure a consistent electrical supply, without fluctuations that can interfere with weld consistency.

e. Properly welded seams shall utilize a one and one-half (1.5) inch wide nozzle, to create a homogeneous weld, a minimum of one and one-half (1.5) inch in width.

B. Inspection:

1. The job foreman or supervisor shall initiate daily inspections of all completed work which shall include but not limited to, the probing of all field welding with a dull pointed instrument to assure the quality of the application and ensure that any equipment or operator deficiencies are immediately resolved.
2. Ensure all aspects of installation, including sheet layout, attachment, welding and flashing details are in strict accordance with the most current manufacturer recommendations.
3. Excessive patching of field seams because of inexperience or poor workmanship will not be accepted at time of final inspection for warranty acceptance.
4. Any deviation from pre-approved specifications or details requires written authorization from the roofing manufacturer prior to application to avoid any warranty disqualification.
5. It is the Contractor, job foreman, supervisor, or quality control personnel's responsibility to perform a final self-inspection on all seams prior to requesting the inspection for warranty issuance by the roofing manufacturer.

3.11 TERMINATIONS AND PENETRATION FLASHINGS

A. Clean vents, pipes, conduits, tubes, walls, and stacks to bare metal. Protrusions must be properly secured to roof deck with approved fasteners.

B. Remove and discard lead, pipes and drain flashing. Flash penetrations according to approved details.

C. Remove loose or deteriorated cant strips and flashings.

D. Flash curbs, parapets and interior walls in strict accordance with approved details.

E. All flashings shall be adhered to properly prepared, approved substrates with bonding adhesive or mastic applied in sufficient quantity to ensure total adhesion.

F. The base flange of all membrane flashing shall extend out on to the plane of the deck, beyond the wood nailers to a maximum width of eight (8) inches.

G. Vertical flashing shall be terminated no less than eight (8) inches above the plane of the deck with approved termination bar and counter-flashings or metal cap flashing.

H. Complete all inside and outside corner flashing details with preformed corners or an approved field fabrication detail.

I. Probe all seams with a dull, pointed probe to ensure the weld has created a homogeneous bond.

J. Install penetration accessories in strict accordance with approved details. Ensure penetration accessories have not impeded in any way the working specification. Refer to the related trade for the technical specification.

3.12 METAL FLASHING

A. All perimeter edge details, surface mounted counterflashings are to be a prefabricated counterflashing system supplied by the roofing system manufacturer providing the warranty.

B. Enlarge existing or add new overflow scuppers with sizes and quantities required according to the drainage calculations submitted for the roofing permit.

C. Ensure all details extend a minimum of two (2) inches lower than the bottom of the wood nailers.

D. Fasten all metal edge flashing and copings to wood nailers or approved substrate with approved fasteners according to RAS-111 Fastening Patterns or in compliance with FBC.

E. Roof Drains:
   1. Flash all roof drains in accordance with Manufacturer roof drain details.
   2. Replace all worn or broken parts that may cut the FiberTite membrane or prevent a watertight seal. This includes the clamping ring and strainer basket.
   3. Replace all drain bolts or clamps used to hold the drain compression ring to the drain bowl.
   4. FiberTite non-reinforced sixty (60) mil membrane shall be used for flashing the drain assembly. Drain assemblies and basins or sumps must be free of any asphalt or coal tar pitch residue prior to installation.
   5. The drain target sheet should be sized and installed to provide for a minimum of twelve (12) inches of exposed sixty (60) mil on all sides of the drain.

F. Forti-Lock Liquid Flashing for non-standard penetrations at KEE roofing membrane.
   1. For aberrant penetrations and pitch pan avoidance, follow FiberTite Forti-Lock guidelines and details for substrate preparation and installation of Forti-Lock liquid flashing on pre-authorized aberrant penetrations.
   2. Forti-Lock Metal Primer: is required for all metal tie-ins and applications with high mechanical stresses, on detail work with small contact areas, metal components with large linear thermal expansion or edge metal terminations.

G. Pitch Pans:
   1. Every reasonable effort shall be made to eliminate the need for pitch pans including the removal of existing pans.
   2. In the event of no alternative, fabricate metal pans from clad metal, installed in accordance with roofing manufacturer details, ensuring proper attachment, maintaining a minimum of two (2) inch clearance around the penetration.
   3. In the event a minimum of two (2) inch clearance cannot be achieved around the penetration or distance from a wall then a PMMA flashing system detail needs to be installed instead of a pitch pan.
   4. All details with less than a minimum of two (2) inch clearance requires a shop drawing to be approved by the Owner’s Representative and approved in writing by the roofing manufacturer that all details comply with the specified warranty.
   5. Pitch Pans shall be filled with non-shrinking grout to within one (1) inch of the top of the pan. Allow the grout to dry and fill remainder of the pan with pourable urethane sealant.
   6. Pitch Pans and the sealant will require periodic maintenance by the building Owner's maintenance personnel.

3.13 SEALANTS

A. Apply authorized sealants to all surface mounted counterflashings and per project requirements. Sealants are to shed water while following all manufacturer installation guidelines.

B. Use primer when recommended by the roofing system manufacturer.

3.14 TEMPORARY SEALS

A. At the end of each working day or at the sign of rain, install temporary, one hundred (100) percent watertight seals where the completed new roofing adjoins the uncovered deck or existing roof surface.

B. The authorized roofing Contractor shall create and maintain the temporary seal in such a manner to prevent water from traveling beneath the new or existing roof system.

C. If water is allowed to enter beneath the newly completed roofing, the affected areas shall be removed and replaced at no additional expense to the building Owner.

D. Prior to the commencement of work, cut out and remove all contaminated membrane, insulation, roof cement or sealant and properly dispose of offsite.

3.15 WALKWAYS

A. Walkways and protection pads shall be installed in identical locations to the layout of the existing roofing system.

B. Walkway Installation:
1. Roofing membrane to receive walkway material shall be clean and dry.
2. Cut and position the walkway material as directed by the specifications or agreement.
3. Hot air weld the entire perimeter of the walkway to the previously cleaned roofing membrane. Avoid excessive heating of the walkway material to prevent scorching the underlying roofing membrane.

C. Protection Pad Installation:
1. Roofing membrane to receive protection pad material shall be clean and dry.
2. Prior to installing the protection pads, 0.25 x 24 x 48 inch, weld a six (6) x six (6) inch strip of membrane to each of the four corners of the back side of the pad. Position the strips in such a way that they overhang the edge of the pad a minimum of two (2) inches around the ninety (90) degree corner.
3. Position the protection pads as directed by the specifications or agreement and weld the visible portion of the previously applied stripping to the roofing membrane.

3.16 LIGHTNING PROTECTION

A. The installation of lightning protection must be coordinated with the authorized roofing contractor, certified lightning contractor and the building Owner.

B. The lightning protection must be installed in such a manner that base plates, air terminals and cables do not penetrate the roofing membrane without the use of pre-approved flashing details.

C. Cables and air terminals may be attached to the membrane using base plates and an approved construction adhesive or by welding intermittent strips of membrane over the base plates and cables to the roofing membrane.

3.17 COMPLETION

A. Remove all debris, excess materials and scrap of any kind from the roof and surrounding premises prior to demobilization.

B. Inspect all field welds, detailing and terminations to ensure a one hundred (100) percent the watertight installation.

3.18 FINAL INSPECTION FOR WARRANTY

A. Upon completion of the project, the authorized roofing contractor shall complete and submit the manufacturer required completion and inspection reports.

B. Upon receipt of the notice of completion, a roofing manufacturer technical representative will schedule an inspection with a representative of the authorized roofing contractor to thoroughly review the installation and verify compliance with specifications.

C. Any corrections or modifications necessary for compliance with the specifications and acceptance for warranty will be noted on the final inspection.

D. Upon completion of all punch list items and final acceptance of the installation, a warranty as authorized by the roofing manufacturer will be issued.

END OF SECTION 07 54 16

SECTION 03 52 16

LIGHTWEIGHT INSULATING CONCRETE (LWIC)

PART 1 GENERAL

1.1 SECTION INCLUDES

A. Insulating concrete fill on corrugated metal deck.

B. Insulating concrete fill on structural concrete deck.

1.2 RELATED SECTIONS

A. Section 07 54 16 – Fully Adhered KEE Single Ply Roofing System.

B. Section 07 56 00 – Liquid Applied Polymethyl Methacrylate (PMMA) Flashings.

C. Section 07 71 00 – Roof Specialties.

1.3 REFERENCES

A. ASCE-7 American Society of Civil Engineering.

B. American Society for Testing and Materials (ASTM).
1. C150-Portland Cement
2. C177-Steady-State Heat Flux Measurements and Thermal Transmission Properties by Means of the Guarded-Hot-Plate Apparatus.
3. C332-Lightweight Aggregates for Insulating Concrete.
4. C495-Compressive Strength of Lightweight Insulating Concrete.
5. C578-Rigid, Cellular Polystyrene Thermal Insulation.
6. C796-Foaming Agents for Use in Producing Cellular Concrete Using Preformed Foam.
7. C869-Foaming Agents Used in Making Preformed Foam for Cellular Concrete.

C. Florida Building Code (FBC), latest edition.

D. Florida Building Code Test Protocol for High Velocity Hurricane Zones, Test Application Standard (TAS) No. 105 - Test Procedure for Field Withdrawal Resistance Testing.

1.4 SUBMITTALS

A. Product data
1. Recycled Content:
   (a) Indicate recycled content; indicate percentage of pre-consumer and post-consumer recycled content per unit of product.
   (b) Indicate relative dollar value of recycled content product to total dollar value of product included in project.
   (c) If recycled content product is part of an assembly, indicate the percentage of recycled content product in the assembly by weight.
   (d) If recycled content product is part of an assembly, indicate relative dollar value of recycled content product to total dollar value of assembly.
2. Regional Materials:

(a) Sourcing location(s): Indicate location of extraction, harvesting, and recovery; indicate distance between extraction, harvesting, and recovery and the project site.
(b) Manufacturing location(s): Indicate location of manufacturing facility; indicate distance between manufacturing facility and the project site.
(c) Product Value: Indicate dollar value of product containing local/regional materials; include materials cost only.
(d) Product Component(s) Value: Where product components are sourced or manufactured in separate locations, provide location information for each component. Indicate the percentage by weight of each component per unit of product.

3. Rapidly Renewable Content:
(a) Indicate manufacturer and product name for each tracked material; total product cost for each tracked material; and percentage of product, by weight, for each material that meets the rapidly renewable criteria.

B. Mix Designs: Submit mix designs to Engineer for review a minimum of 20 days before first placement. Do not proceed without Engineer's written approval.

C. Submit certified test reports stating that concrete physical properties meet specification requirements.

D. Submit Roof Plan showing pitch/taper, sumps, details cut locations. Submit details.

E. Complete current Florida Building Code (FBC) High Velocity Hurricane Zones (HVHZ) Protocols and required product Notice of Acceptance (NOA).

1.5 QUALITY ASSURANCE

A. Applicator: Company specializing in placing lightweight concrete fill material and approved by manufacturer.

B. Complete insulating concrete roof deck system: Certified in writing, jointly, by the manufacturer and the licensed applicator, verifying that work conforms to requirements of the contract documents and manufacturer's requirements for honoring the manufacturer's warranty as specified in the appropriate Roofing Section.

C. Tests:
1. Compressive test for insulating concrete: ASTM C495.
2. Thermal transmission: ASTM C177.

D. Code Compliance.
1. Building Code: The complete roofing system shall comply with all applicable requirements of the Florida Building Code.
2. Product Approvals: Roofing system shall have current FBC HVHZ Protocols or required product Notice of Acceptance (NOA) for each roofing system applied to each type of substrate.
3. Wind Resistance: Execute the installation of the LWIC system to comply with wind resistance requirements of applicable building codes for specific negative wind pressures at various building elevations (heights) as indicated on the Drawings.
(a) Calculations: Wind load calculations shall be prepared by a licensed structural engineer registered in the State of Florida in accordance with ASCE 7.

1.6 PRE-INSTALLATION MEETING

A. Shall not occur without Shop Drawings approved by the Contractor and accepted by the Consultant.

B. Convene a minimum of two weeks before starting work of this section.

C. Required Attendees:
1. Owner’s Project Manager.
2. Consultant.
3. Roofing Contractor.
4. LWIC installer.
5. Roof System Manufacturer.
6. Installers of roof-top units and other work in and around roofing that must precede or follow LWIC work, including mechanical work if any.
7. Any other subcontractors associated with roof assembly work.

D. Agenda shall include:
1. Review preparation and installation procedures and coordinating and scheduling required with related work.
2. Review LWIC system requirements including drawings, specifications, and other contract documents.
3. Review Shop Drawings and associated submittals.
4. Review manufacturer's technical materials.
5. Review and finalize construction schedule related to roofing work and verify availability of materials, personnel, equipment and facilities needed to make progress and avoid delays.
6. Review required inspection, testing, certifying and installation procedures.
7. Review weather and forecasted weather conditions, and procedures for coping with unfavorable conditions, including temporary roofing.
8. Tour representative areas of LWIC substrates (decks), inspect and discuss condition of the substrate, roofing system, roof drains, curbs, penetrations and other preparatory work performed by other trades.

1.7 PROJECT CONDITIONS

A. Environmental Requirements: When air temperature of forty (40) degrees F or above are predicted for the first seventy two (72) hours after placement, normal placement procedures may be used.

B. Inspection: The applicator shall be responsible for inspection and approval of the substrate as being suitable for the roof insulation system.

PART 2 PRODUCTS

2.1 ACCEPTABLE PRODUCTS

A. Subject to compliance with the specified requirements, provide products for roofing and re-roofing as appropriate, by one the following:
1. Celcore Inc.

2.2 MATERIALS

A. All lightweight concrete materials are to contain recycled content such as reclaimed Portland cement. All expanded polystyrene board to contain recycled content.

B. All lightweight concrete materials to meet the requirements of FBC FL4930-R28, System LWC-15.

C. Cellular Insulating Concrete: Slurry of cellular Portland cement, water, and manufacturer's product. No admixtures shall be used without approval by LWIC manufacturer.
   1. Portland Cement: ASTM C150, Type I, II, or III.
   2. Cellular Foaming Agent: ASTM C869 and C796.
      (a) All cellular foaming agents to be manufactured from one hundred (100) per cent bio-based materials.
   3. Water: Potable, clean and free of deleterious amounts of acid, alkali and organic materials.
   4. Vented Insulation Board: Comply with ASTM C578, expanded polystyrene as approved by LWIC manufacturer.
      (a) Board thickness: Per shop drawings.
      (b) The average R value shall be nineteen (19).
      (c) The finished tapered slope shall be one-eighth (1/8) inch per foot.
   5. Curing Compound: Celcore HS Rheology Modifying Admixture as cited in FBC FL4930-R28, System LWC-15.

D. Aggregate Insulating Concrete: Slurry of cellular Portland cement, water, and manufacturer's product. No admixtures shall be used without approval by LWIC manufacturer.
   1. Portland Cement: ASTM C150, Type I, II, or III.
   2. Aggregate: ASTM C332, Expanded vermiculite.
      (a) ASBESTOS: Must be asbestos free, no asbestos shall be allowed, not even trace levels shall accepted.
   3. Water: Potable, clean and free of deleterious amounts of acid, alkali and organic materials.
   4. Vented Insulation Board: ASTM C578, Expanded polystyrene as approved by LWIC manufacturer.
      (a) Board thickness: Per shop drawings.
   5. Curing Compound: For use when allowed by the LWIC manufacturer and when used in accordance with LWIC manufacturer's written recommendations.

E. When required, mesh reinforcement shall be equal to keydeck type 21602-1619.

F. Venting Accessories:
   1. Stack Vents and Perimeter Vents: Provide in compliance with manufacturer's requirements and Florida Building Code (FBC) High Velocity Hazard Zone (HVHZ) Protocols and required product Notice of Acceptance (NOA).

2.3 PHYSICAL PROPERTIES OF MIX

A. Cellular:
   1. Density at time of placement: 38-50 pcf min.
   2. Oven dry density: 30 pcf min.
   3. Minimum compressive strength: 390 psi min. (ASTM C495).

B. Aggregate:
   1. Density at time of placement: 60-68 pcf min.
   2. Oven dry density: 35 pcf min.
   3. Minimum compressive strength: 390 psi min. (ASTM C495).

PART 3 EXECUTION

3.1 REMOVALS

A. Lightweight Insulating Concrete Decks: Remove completely all existing roof membranes and insulation materials to steel and concrete decks. Install new lightweight insulating concrete system or remove and replace existing wet/deteriorated lightweight insulating concrete with new lightweight concrete when fastener field withdrawal resistance per FBC cannot be achieved or when moisture exceeds:
   1. Cellular: 20 percent moisture.
   2. Aggregate: 30 percent moisture.

3.2 PREPARATION

A. Cover drains. Set screeds to assure correct thickness of insulating concrete.

B. Install all roof penetration assemblies such as scuttles, curbs, joint assemblies, vents, piping, and electrical risers and conduit.

C. Close or seal all joints and openings in steel and concrete decks prior to concrete placement with temporary roofing materials.

3.3 INSTALLATION

A. Mix and pump into place under provisions of manufacturer's instructions using equipment designed specifically for this type of work.

B. Insulation Installation:
   1. Fill steel form corrugations with slurry coat of insulating concrete to a minimum of one eighth (1/8) inch over the top of form.
   2. Place insulation board on concrete within thirty (30) minutes of placing of concrete slurry.
   3. Lay insulation board per Florida Building Code (FBC) High Velocity Hurricane Zones (HVHZ) Protocols and Notice of Acceptance (NOA).
   4. Boards and slurry shall be left undisturbed a minimum of twenty four (24) hours before application of top coat.
   5. Install layer of insulating concrete within twenty four (24) hours of installing the initial leveling coat. All areas of one eighth (1/8) inch leveling layer of insulating concrete and insulation board not covered by the lightweight concrete within four hours shall be removed from the deck.
   6. Install insulating concrete and develop the new sloping sections to drains on roof after as shown on roof plan.
   7. The average R value shall be nineteen (19) as tested in accordance with ASTM C177 which includes the outside air film roofing materials, insulating concrete, insulating board, and inside air.

C. Concrete Placing:
   1. Pump concrete into place. Do not vibrate or tamp.
   2. Screed to an even surface, and to drain. Broom finish.
   3. Thickness of concrete over top of insulation: Per Florida Building Code (FBC) High Velocity Hurricane Zones (HVHZ) Protocols and required product Notice of Acceptance (NOA).

3.4 FIELD QUALITY CONTROL

A. Conduct wet density test daily. At least four (4) test specimens shall be sampled at the point of placement for each day's pour or each eight (8) cubic yards of material placed. Test in accordance with ASTM C495.

B. Prior to commencement of roofing, insulating concrete applicator shall flood test the deck to insure positive slope and drainage. If there is any ponding water, it shall be corrected before placement of the roofing materials.

C. Furnish Certificate of Compliance to the Owner upon completion of job.

END OF SECTION

SECTION 07 56 00

LIQUID APPLIED POLYMETHYL METHACRYLATE (PMMA) FLASHINGS

PART 1 GENERAL

1.01 SUMMARY

A. The secondary waterproofing flashing system shall consist of a cold liquid applied reinforced waterproofing membrane and finish layers as specified.
B. Work shall include, but is not limited to, the following:
   1. Preparation of existing flashing substrates.
   2. Liquid applied, reinforced flashings.
   3. All related materials and labor required to complete specified waterproofing.

1.02 RELATED SECTIONS

A. Section 03 52 16 – Lightweight Insulating Concrete
B. Section 07 54 16 – Single Ply KEE Roofing Systems
C. Section 07 71 00 – Roof Specialties

1.03 DEFINITIONS

A. ASTM D 1079- Standard Terminology Relating to Roofing and Waterproofing.
B. The National Roofing Contractors Association (NRCA) Roofing and Waterproofing Manual, Fifth Edition Glossary.

1.04 REFERENCES

A. AMERICAN SOCIETY OF CIVIL ENGINEERS - Reference Document ASCE 7, Minimum Design Loads for Buildings and Other Structures.
B. AMERICAN STANDARD OF TESTING METHODS (ASTM):
   1. ASTM C 836 - Standard Specification for High Solids Content, Cold Liquid applied Elastomeric Waterproofing Membrane for Use with Separate Wearing Course.
   2. ASTM C 920 - Standard Specification for Elastomeric Joint Sealants
C. FLORIDA BUILDING CODE (FBC):
   1. 2023 Florida Building Code (FBC).
D. NATIONAL ROOFING CONTRACTORS' ASSOCIATION (NRCA).
   1. UL 790 - Standard Test Methods for Fire Tests of Roof Coverings.
   2. UL 1256 – Fire Test of Roof Deck Constructions.

1.05 ACTION SUBMITTALS

A. Product Data Sheets: Submit manufacturer's product data sheets, installation instructions and/or general requirements for each component.
B. Safety Data Sheets: Submit manufacturer's Safety Data Sheets (SDS) for each component.

1.06 INFORMATIONAL SUBMITTALS

A. Submit a letter from the roofing manufacturer indicating the contractor is an authorized

applicator.

1.07 QUALITY ASSURANCE

A. MANUFACTURER QUALIFICATIONS:
   1. Manufacturer shall have 20 years of manufacturing experience.
   2. Manufacturer shall have trained technical service representatives employed by the manufacturer, independent of sales.
   3. Manufacturer shall provide site visit reports in a timely manner.

B. CONTRACTOR QUALIFICATIONS:
   1. Contractor shall be authorized by the manufacturer to install specified materials prior to the bidding period through satisfactory project completion.
   2. Applicators shall have completed projects of similar scope using same or similar materials specified.
   3. Contractor shall provide full time, on-site superintendent or foreman experienced with the specified roofing from beginning through satisfactory project completion.
   4. Applicators shall be skilled in the application methods for all materials.
   5. Contractor shall maintain a daily record, on-site, documenting material installation and related project conditions.
   6. Contractor shall maintain a copy of all submittal documents, on-site, available always for reference.

C. FLASHING SUBSTRATE EVALUATION:
   1. Contractor shall evaluate substrate moisture content and adhesion of waterproofing materials to substrate throughout the work and record with daily inspection reports or other form of reporting acceptable to the owner or his designated representative and waterproofing manufacturer.
      a. Moisture content: Evaluate substrate moisture content to determine acceptability for application of the specified liquid applied waterproofing materials. Moisture testing shall be performed by means suitable to the project application, or by testing substrate relative humidity (RH) in accordance with ASTM F 2170 when needed, required, or if substrate moisture content is in question.
      b. Adhesion: Evaluate soundness and surface preparation of concrete and masonry substrates. Prepare representative areas using specified methods complete with applied primer and waterproofing membrane.
      c. Test for minimum acceptable tensile bond strength values as required in accordance with ASTM D 4541. Evaluate all areas where concrete appears to differ in appearance or consistency, if multiple areas are involved in the scope of work, evaluate each area with a minimum of (3) tests for every 5,000 ft^2 or as required by project conditions.

D. SOLVENT CONTAINING ROOF MASTICS, COATINGS & ADHESIVES
   1. Cold liquid applied PMMA flashings should not be applied on, over or in conjunction with newly applied solvent containing roof mastics, coatings, and adhesives.

1.08 DELIVERY, STORAGE AND HANDLING

A. Refer to each product data sheet or other published literature for specific requirements.
B. Deliver materials and store them in their unopened, original packaging, bearing the manufacturer's name, related standards, and any other specification or reference accepted as standard.
C. Protect and store materials in a dry, well-vented, and weatherproof location. Only materials to be used the same day shall be removed from this location. During cold weather, store materials in a heated location, removed only as needed for immediate use.

D. When materials are to be stored outdoors, store away from standing water, stacked on raised pallets or dunnage, at least 4 inches or more above ground level. Carefully cover storage with “breathable” tarpaulins to protect materials from precipitation and to prevent exposure to condensation.

E. Carefully store roof membrane materials delivered in rolls on-end with selvage edges up. Store and protect roll storage to prevent damage.

F. Properly dispose of all product wrappers, pallets, cardboard tubes, scrap, waste, and debris. All damaged materials shall be removed from job site and replaced with new, suitable materials.

1.09 SITE CONDITIONS

A. SAFETY:

1. The contractor shall be responsible for complying with all project-related safety and environmental requirements.
2. The contractor shall review project conditions and determine when and where conditions are appropriate to utilize the specified liquid applied or semi-solid roofing materials. When conditions are determined by the contractor to be unsafe or undesirable to proceed, measures shall be taken to prevent or eliminate the unsafe or undesirable exposures and conditions, or equivalent approved materials and methods shall be utilized to accommodate requirements and conditions.
3. The contractor shall review project conditions and determine when and where conditions are appropriate to utilize the specified hot asphalt-applied materials. When conditions are determined by the contractor to be unsafe or undesirable to proceed, measures shall be taken to prevent or eliminate the unsafe or undesirable exposures and conditions, or equivalent approved materials and methods shall be utilized to accommodate requirements and conditions.
4. The contractor shall refer to product Safety Data Sheets (SDS) for health, safety, and environment related hazards, and take all necessary measures and precautions to comply with exposure requirements.

B. ENVIRONMENTAL CONDITIONS:

1. Monitor substrate and material temperature, as well as all environmental conditions such as ambient temperature, moisture, sun, cloud cover, wind, humidity, and shade. Ensure conditions are satisfactory to begin work and ensure conditions remain satisfactory during the installation of specified materials. Materials and methods shall be adjusted as necessary to accommodate varying project conditions. Materials shall not be installed when conditions are unacceptable to achieve the specified results.
2. Precipitation and dew point: Monitor weather to ensure the project environment is dry before, and will remain dry, during the application of roofing materials. Ensure all roofing materials and substrates remain above the dew point temperature as required to prevent condensation and maintain dry conditions.
3. Contractor shall implement odor control measures where required during the application of waterproofing materials and adjust methods as necessary to accommodate varying project conditions.

1.10 WARRANTY

A. Manufacturer Waterproofing Warranty: The manufacturer of the specified roofing membrane shall provide the owner with the manufacturer’s warranty according to the specified terms in Section 07 54 16.

B. The contractor shall guarantee workmanship and shall provide the owner with the contractor’s warranty covering workmanship for a period of two (2) years from completion

date.

PART 2 PRODUCTS

2.01 MANUFACTURER

A. Basis of Design: FiberTite, Seaman Corporation
B. Substitutions: Roofing manufacturer must comply in all respects to the specified roofing membrane ASTM standards and local building code to be considered for equivalency.
C. Requests for substitutions will be considered in accordance with the provisions of this Section and Product Requirements.

2.02 LIQUID APPLIED FLASHING SYSTEM

A. Forti-lock PMMA Flashing System by FiberTite, Seaman Corporation.
    1. Forti-lock Liquid Flashing - Summer Grade, Gray Color
    2. Forti-lock Catalyst Powder
    3. Forti-lock Fleece

2.03 ACCESSORIES

A. PRIMERS:
    1. Soprema Alsan RS LO Primer: Low odor, two-part, epoxy-based primer for concrete, metals, and other approved substrates.
        a. SOPREMA ALSAN RS LO PRIMER PART A:
            i VOC content: 0 g/L
            ii Color: Black
        b. SOPREMA ALSAN RS LO PRIMER PART B:
            i VOC content: 0 g/L
            ii Color: Amber
B. SUBSTRATE PATCHING & REPAIR:
    1. POLYMETHYL METHACRYLATE PASTE (PMMA):
        a. Soprema Alsan RS Paste: Rapid curing, polymethyl methacrylate (PMMA) paste resin used to fill small cracks and voids on non-traffic bearing substrates prior to the application of PMMA/PMA membranes.
            i VOC content: 4.4 g/L
            ii Color: Pebble Grey

PART 3 EXECUTION

3.01 EXAMINATION

A. Examination includes visual observations, qualitative analysis, and quantitative testing measures as necessary to ensure conditions are satisfactory to begin and remain satisfactory throughout the project.
B. The contractor shall examine all waterproofing substrates including, but not limited to decks, walls, curbs, equipment, fixtures, and wood blocking.
C. The applicator shall not begin installation until conditions have been properly examined and determined to be clean, dry and, otherwise satisfactory to receive specified roofing and waterproofing materials.

3.02 FLASHING SUBSTRATE PREPARATION

A. PMMA preparation of the top side of all flashings and at all penetrations for the temporary roof that will have lightweight insulating concrete poured as the roofing substrate and insulation of the roofing system.

B. PMMA preparation to any non-standard or irregular details of the finished KEE membrane system that cannot receive standard preformed or field fabricated KEE boots, split pipe boots, wall flashings and penetrations.

C. Before commencing work each day, the contractor shall prepare all substrates to ensure conditions are satisfactory to proceed with the installation of specified materials.

D. Preparation of substrates includes, but is not limited to, the following:

1. General:
    a. All substrates must be clean, dry, and free from gross irregularities, loose, unsound, or foreign material such as dirt, ice, snow, water, grease, oil, release agents, lacquers, or any other condition that would be detrimental to adhesion of primer and/or resin materials to the substrate. Most surfaces will require mechanical abrasion in the form of scarifying, shot blasting or grinding to achieve a suitable substrate.
    b. Inspect all substrates and correct defects before application of waterproofing materials. Fill all surface voids 1/16 in (1.5 mm) or greater wide and/or deep with appropriate fill material.
2. Concrete Substrates:
    a. Concrete shall comply with requirements of ACI 301 and ACI 308.
    b. Concrete compressive strength: 3,500 psi for all primers or 2,500 psi minimum when use of a moisture mitigation primer is required.
    c. Adhesion: Adhesion of specified primer and structural substrate shall be 116 psi for non-traffic bearing areas per ASTM D4541.
    d. Areas of spalls, voids, bug holes and other deterioration on vertical or horizontal surfaces shall be repaired as required or recommended.
3. Masonry Substrates:
    a. Walls shall be structurally sound concrete block or waterproof concrete block construction.
    b. Liquid applied membrane must not be applied over soft or scaling brick or block, faulty mortar joints, or walls with broken, damaged, or leaking coping. Areas of spalls, voids, bug holes and other deterioration on vertical surfaces shall be repaired as required or recommended.
    c. Walls of ordinary hollow tile or other materials which in themselves are not waterproofed, should not be accepted as suitable to receive liquid applied membrane unless properly waterproofed to prevent moisture infiltration from above or behind the new liquid applied membrane.
    d. Relative humidity: Maximum seventy five (75) percent per ASTM F2170 unless otherwise approved.
4. Metal Substrates:
    a. Clean and prepare metal to near-white metal in accordance with SSPC – SP3 (power tool clean) to a point maximum one-eighth (1/8) beyond the termination of liquid applied membrane materials and wipe with solvent cleaner to remove oils, debris, or contaminants.
    b. Stainless Steel Series 300 and 400: Abrade to provide rough, open surface and wipe with solvent cleaner to remove oils, debris, or contaminants.
    c. Galvanized & Zinc-Rich Metals: Galvanized and/or zinc rich metals are coated with either a layer of oil to prevent white rust or is passivated which must be completely removed prior to applying primer or liquid applied waterproofing. This can be confirmed by applying a coat of copper sulfate solution to the prepared and cleaned galvanized/zinc metal. A properly prepared surface will turn black indicating the

passivator has been removed. If the surface does not turn black, additional abrasive cleaning will be required.

d. Adhesion: Examine metal substrates by conducting adhesion testing. Prime with specified metal primer where required to achieve adequate adhesion.

5. Rigid Plastics (PVC & ABS):
   a. Rigid plastics should be lightly abraded and wiped with solvent cleaner. Extend preparation maximum 1/8 in (3 mm) beyond the specified termination of the liquid applied membrane flashing materials.
6. Smooth Surface Self-Adhered SBS Membrane:
   a. The top surface of existing smooth surface membrane shall be clean and dry. Remove all dust, dirt, or debris from the surface of the membrane by broom, blower, or power vacuuming.
7. Tie-In to Other Compatible Flashing Surfaces:
   a. Remove all contaminants and prepare substrate as needed to receive liquid applied waterproofing.
   b. Lightly scrub surface with an abrasive pad and wipe with acceptable cleaner.
   c. Adhesion: Examine substrates by conducting adhesion testing. Prime with specified primer where required to achieve adequate adhesion. If acceptable adhesion is not obtained, attempt higher degree of surface abrasion and repeat.

E. Where conditions are found to be unsatisfactory, work shall not begin until conditions are adjusted appropriately. Commencing of work shall indicate contractor's acceptance of conditions.

3.03 PRIMER APPLICATION – GENERAL

A. PMMA metal primer to be applied to the top side of all flashings and at all penetrations for the temporary roof that will have lightweight insulating concrete poured as the roofing substrate and insulation of the roofing system.

B. PMMA metal primer to be applied to any non-standard or irregular details of the finished KEE membrane system that cannot receive standard preformed or field fabricated KEE boots, split pipe boots, wall flashings and penetrations.

C. Refer to manufacturer's detail drawings, product data sheets and published general requirements for application rates and specific installation instructions.

D. Examine all substrates and conduct adhesion peel tests as necessary to ensure satisfactory adhesion is achieved.

3.04 EPOXY PRIMER APPLICATION FOR METAL SURFACES

A. Low Odor Primer Applications:
   1. Mix A and B parts using a clean spiral agitator on slow speed or stir stick until evenly mixed. Do not aerate. Mix only the amount of primer that can be used within the application time.
   2. Apply primer to compatible, clean, and prepared substrate preferably with falling temperature to reduce potential for pinholes from "off-gassing" and as required to enhance adhesion of new specified waterproofing materials.
   3. Apply primer using notched squeegee and roller or brush at the rate published on the product data sheet. Do not allow primer to pond or collect in low areas.
   4. When primer will be left exposed beyond recommended recoat times, broadcast to excess with #1 (0.7 – 1.2mm) kiln-dried quartz into the final coat of epoxy primer while still wet at the rate of 30 lb/100 ft^2 (1.5 kg/m^2) as a mechanical bonding layer. After cure, remove loose aggregate and keep dry until

subsequent system components are applied.

5. Project conditions vary throughout the day. Monitor changing conditions, and the curing time of primers.
6. Allow primer to fully cure and remove excess aggregate before membrane application.

3.05 SUBSTRATE PATCHING, LEVELING & REPAIR

A. GENERAL:
   1. After priming and before commencing with application of liquid applied waterproofing, the contractor shall patch, level, or repair all substrates as required to eliminate bug holes, voids, cavities, low spots, repair cracks or any other condition that may be detrimental to proper application of the liquid applied waterproofing.

B. PATCHING, LEVELING & REPAIRS:
   1. Contractor shall use proprietary paste or resin-mortar for all patching, leveling or repairs wherever possible. Refer to manufacturer's detail drawings, product data sheets and published general requirements for application rates and specific installation instructions.
   2. Non-traffic bearing horizontal or vertical substrates: Use paste or resin-mortar for all substrate leveling, patching and repairs.
   3. Application:
      a. Install paste or resin-mortar over a fully cured primer.
      b. The substrate shall be dry and free of any dust or loose particles.
      c. Mix paste resin and/or resin-mortar using a slow speed agitator prior to pouring into a larger container.
      d. When required, combine the paste or resin-mortar with #1 (0.7 – 1.2mm) kiln-dried quartz aggregate as recommended for deep voids or large areas.
      e. Mix paste and/or resin-mortar and catalyst approximately 2 minutes using a clean spiral agitator on slow speed or stir stick until evenly mixed. Do not aerate. Mix only the amount of product that can be used within the application time.
      f. Apply the catalyzed paste and/or resin-mortar onto the substrate using a smoothing trowel, working the material into the surface for complete coverage and full adhesion.
      g. Paste and/or resin-mortar should be placed in lifts no greater than the maximum thicknesses recommended.
      h. If additional lifts will be required, broadcast top surface of the placed paste or resin-mortar with clean dry #1 (0.7 - 1.2 mm) kiln-dried quartz aggregate at approximately 25% coverage while the paste and/or resin-mortar is wet. Place next lift once the paste and/or resin-mortar has cured.

C. NON-MOVING (STATIC) CRACKS – 1 mm or less:
   1. Determine that crack is non-moving. Remove any existing filler and clean out crack by brushing and oil-free compressed air. Fill crack with resin mortar or paste as required.

D. MOVING (DYNAMIC) CRACKS – 1 mm or less:
   1. Determine that crack is moving. Remove any existing filler and clean out crack by brushing and oil-free compressed air. Fill crack with resin-mortar or paste as required. After the resin-mortar or paste has cured, apply minimum 4 in (100 mm) wide strip of reinforced cold liquid applied membrane centered over crack.

E. MOVING (DYNAMIC) CRACKS – 3 mm or less:

1. Determine that crack is moving. Remove any existing filler and clean out crack by brushing and oil-free compressed air. Fill crack with resin-mortar or paste as required. After the resin-mortar or paste has cured, apply bond breaker tape 5 times in width greater than the maximum anticipated expansion. Then cover with a strip of reinforced cold liquid applied membrane centered over crack sized to provided 2 in (50 mm) minimum cover beyond all side of the bond breaker tape but no less than 6 in (150 mm) minimum width.

F. MOVING (DYNAMIC) CRACKS – Greater than 3 mm:
   1. Moving cracks greater than 3 mm must be treated as an expansion joint.

3.06 INSTALLATION & STAGING

A. Follow accepted procedure for applying cold liquid applied membrane flashings to substrate. In all cases the substrate is prepared, primed, and flashings are installed to the in-situ waterproofing membrane. When applying broadcast aggregate, the aggregate should not be left subject to the elements and therefore must be top coated with finish the same day of application whenever possible.

B. If work is interrupted for more than 12 hours, use manufacturer's proprietary cleaner to clean and reactivate applied primer, resin mortar, flashing membrane or field membrane transition areas. Cleaner should be allowed a minimum of 20 minutes evaporation time after application and covered within 60 minutes of application or as recommended by the manufacturer.

3.07 FLASHING MEMBRANE APPLICATION

A. PMMA to be applied to the top side of all flashings and at all penetrations for the temporary roof that will have lightweight insulating concrete poured as the roofing substrate and insulation of the roofing system.

B. PMMA to be applied to any non-standard or irregular details of the finished KEE membrane system that cannot receive standard preformed or field fabricated KEE boots, split pipe boots, wall flashings and penetrations.

C. General:
   1. Refer to manufacturer's detail drawings, product data sheets and published general requirements for application rates and specific installation instructions.
   2. Provide a minimum vertical height of eight (8) inches for all flashing terminations wherever possible. Flashing height shall be at least as high as the potential water level that could be reached because of a deluging rain and/or poor slope.
   3. Do not flash over existing through-wall flashings, weep holes and overflow scuppers.
   4. All flashing shall be terminated as required by the manufacturer. Cap flashings or counter flashings may be constructed of metal, stone, tile, or other materials properly installed in accordance with industry-accepted practice.
   5. Install all temporary flashing membranes before installing lightweight concrete and field membranes.
   6. The primed substrate shall be dry and free of any dust, loose particles, or contaminants.
   7. Precut reinforcing fleece to conform to terminations, transitions and penetrations being flashed. Ensure a minimum 2 inches overlap of fleece at side laps and extend flashing four (4) inches minimum horizontally onto deck unless otherwise specified. Ensure the completed liquid applied flashing membrane is fully reinforced.
   8. Wherever possible factory pre-cut fleece pipe penetration and universal corners shall be used.
   9. Mix waterproofing resin and catalyst approximately two (2) minutes using a clean

spiral agitator on slow speed or stir stick until evenly mixed. Do not aerate. Mix only the amount of waterproofing resin that can be used within the application time.

10. Apply the base coat of catalyzed waterproofing resin onto the substrate using a brush or roller, working the material into the surface for complete coverage and full adhesion.
11. Immediately apply the reinforcing fleece into the wet base coat of resin making sure the smooth side is up. Using a brush or roller, work the reinforcing fabric into the wet resin while applying the second coat of catalyzed waterproofing resin to completely encapsulate the fleece. Avoid any folds and wrinkles.
12. At membrane tie-ins, clean cured membrane with specified cleaner before application of adjacent membrane.

D. Base and Wall Flashings:
1. Install PMMA flashings at the top side of all vapor barrier flashing membranes for secondary waterproofing system before installing lightweight concrete insulation system and field membranes.
2. The primed substrate shall be dry and free of any dust, loose particles, or contaminants.
3. Precut reinforcing fleece to conform to terminations, transitions and penetrations being flashed. Ensure a minimum 2 in overlap of fleece at side laps and extend flashing 4 in minimum horizontally onto deck unless otherwise specified. Ensure the completed liquid applied flashing membrane is fully reinforced.
4. Mix waterproofing resin and catalyst approximately 2 minutes using a clean spiral agitator on slow speed or stir stick until evenly mixed. Do not aerate. Mix only the amount of waterproofing resin that can be used within the application time.
5. Apply the base coat of catalyzed waterproofing resin onto the substrate using a brush or roller, working the material into the surface for complete coverage and full adhesion.
6. Immediately apply the reinforcing fleece into the wet base coat of resin making sure the smooth side is up. Using a brush or roller, work the reinforcing fabric into the wet resin while applying the second coat of catalyzed waterproofing resin to completely encapsulate the fleece. Avoid any folds and wrinkles.
7. At membrane tie-ins, clean cured membrane with specified cleaner before application of adjacent membrane.

E. Penetrations & Flashings:
1. Pipes, Conduits, Posts, Supports and Unusual Shaped Penetrations:
    a. Pipes, conduits, and other items to be flashed must be separated with ½ in (13 mm) minimum clearance or as recommended by manufacturer to adequate waterproof each individual penetration.
    b. All penetrations must be flashed individually. Two or more items ganged together in a flashing will NOT be permitted.
    c. Flash penetrations using cold liquid applied reinforced membrane or proprietary fibrated flashing resin as recommended. Flashing shall be applied using factory pre—cut fleece wherever possible consisting of a reinforced deck skirt/target flashing applied over a reinforced vertical wrap finger flashing.
2. Drains:
    a. Flash drains using cold liquid applied membrane. Flashing shall consist of a membrane target extending minimum 12 in (300 mm) horizontally onto the substrate applied over a finger flashing extended into the prepared drain bowl a minimum of 3 in (75 mm).
    b. At no time should the cold liquid applied membrane be installed to restrict or reduce the drain inlet in size.

c. For new drains, contractor shall include cost of all plumbing work, piping, and connection to existing storm sewer system.

3. Hot Pipes:
   a. Protect cold liquid applied membrane components from direct contact with steam or heat sources when the in-service temperature exceeds 150°F (65.5°C). In all such cases flash to an intermediate "cool" sleeve.
   b. Fabricate "cool" sleeve in the form of a metal cone using non-ferrous metal in accordance with manufacturer details.
   c. Flash sleeve using cold liquid applied reinforced membrane like a standard pipe flashing. Flashing shall consist of a reinforced target applied over a reinforced vertical wrap finger flashing.
4. Flexible Penetrations:
   a. Provide a weather-tight gooseneck set in manufacturers resin paste and secured to the deck.
   b. Flash gooseneck penetrations using cold liquid applied reinforced membrane as recommended. Flashing shall consist of a reinforced target and reinforced vertical wrap finger flashing.
5. Walls, Curbs and Bases:
   a. Flash all walls, curbs and bases using cold liquid applied reinforced membrane. Wherever possible extend flashing up and over tops of walls, curbs, and bases so the membrane terminates on the opposite face of the vertical element.
6. Expansion Joints:
   a. Flash all expansion joints with minimum two layers of manufacturers cold liquid applied reinforced membrane applied over an expansion joint compressible filler, expansion tube, backer rod and/or bond breaker tape as recommended by manufacturer.
7. Non-standard Flashing Details:
   a. When required, consult manufacturer for recommendations on flashing non-standard conditions, penetrations, or protrusions.

F. Thru-Wall Flashings, Mud-set Masonry, & Poured-In-Place Concrete Bonding/Protection Layer:
1. For all areas to receive new direct applied cement, concrete, or mortar setting bed, apply a supplementary wearing coat of the membrane manufacturer's cold liquid applied resin.
   a. Using a lambswool roller, apply an even layer of cold liquid applied resin at the minimum consumption of 30 lbs/100 ft^2 (1.5 kg/m^2) or as recommended by the membrane manufacturer and broadcast #1 (0.7 - 1.2mm) kiln-dried quartz aggregate into the wet resin to excess for full coverage.
   b. Allow resin bonding layer to cure as recommended by the membrane manufacturer prior to continuing application or applying loads. Remove excess un-adhered aggregate from surface by broom, vacuum, or oil-free blower prior to apply overburden.
   c. When required, consult manufacturer for recommendations on flashing non-standard conditions, penetrations, or protrusions.

3.08 CLEAN UP

A. Uncured resin is considered a hazardous material. Unused resin must be catalyzed and cured prior to disposal.

B. Clean up and properly dispose of waste resulting from these operations each day as required to prevent damages and disruptions to operations.

3.09 PROTECTION

A. Upon completion of new work (including all associated work), institute appropriate procedures for surveillance and protection of finished work during remainder of construction period. Protect all areas where waterproofing membrane has been installed.

END OF SECTION 07 56 00

NOA

Nemo|cert.
353 Christian Street, Unit 12b
Oxford, CT 06478
(475) 888-CERT (2378)
www.nemocert.com

NEMO EVALUATION REPORT (NER)

Seaman Corporation
1000 Venture Blvd.
Wooster, OH 44691
(800) 927-8578

SUBJECT:	**FiberTite Roof Systems**
SCOPE:	This NEMO Evaluation Report (henceforth 'NER') is issued under F.A.C. Rule 61G20-3 and the applicable rules and regulations governing Product Approval of construction materials in the State of Florida and ISO/IEC 17065 via NEMO|cert. NEMO Evaluations has evaluated the product described herein for compliance with the Code sections noted herein.
CODES:	2024 International Building Code 2023 Florida Building Code, 8th Edition TDI Third-Party Evaluation Report acceptance
JURISDICTION:	Non-HVHZ and HVHZ
CATEGORY:	**FBC:** Roofing **NEMO:** Single Ply
SUB-CATEGORY:	**FBC:** Single Ply Roof Systems
CSI DIVISION:	07 00 00 Thermal and Moisture Protection 07 54 00 Thermoplastic Membrane Roofing 07 54 16 Ketone Ethylene Ester Roofing
METHOD:	Method 1, Option C – Codified Material, Evaluation by Evaluation Entity
COMPLIANCE STATEMENT:	**FiberTite Roof Systems**, as produced by **Seaman Corporation**, have demonstrated compliance with **2020 ICC 500** and **2023 ANSI/ICC 500** ICC/NSSA Standard for the Design and Construction of Storm Shelters requirements for use on hurricane shelters and the Code sections noted herein through testing in accordance with the referenced Standards, rational analysis and an ongoing quality assurance program. Compliance is subject to the Installation Requirements and Limitations of Use set forth herein.
QUALITY ASSURANCE:	Evidence of current quality assurance shall be listing and/or labeling in accordance with the requirements of NEMO|cert.
CONTINUED COMPLIANCE:	This NER is valid until such time the named product(s) change, the referenced Quality Assurance changes, or the evaluated Code provisions change. NEMO Evaluations requires, at minimum, a complete review of this NER with each 3-year Code Cycle.
BUILDING PERMIT REQUIREMENTS:	As required by the Building Official or Authority Having Jurisdiction to evaluate the installation of this product.
ADVERTISEMENT:	"NEMO Evaluated" may be displayed in advertising literature. If any portion of the NER is displayed, it shall be displayed in its entirety.
CERTIFICATION OF INDEPENDENCE:	✓ NEMO CERT, LLC has not, nor does it intend to acquire or will it acquire, a financial interest in any company manufacturing or distributing products it evaluates. ✓ NEMO CERT, LLC is not owned, operated or controlled by any company manufacturing or distributing products it evaluates. ✓ This is a building code evaluation. NEMO CERT, LLC is not, in any way, the Designer of Record for any project on which this NER, or previous versions thereof, is/was used for permitting or design guidance.

©NEMO. All rights reserved.

LINK TO TOP OF ATTACHMENT REQUIREMENTS

ISO/IEC 17065 PCA-145

ISO/IEC 17020 AA-779

1. CODES, PROPERTIES AND STANDARDS:

Code	Section	Property	Standard
2024 International Building Code	202, 423.1	Impact resistance	ICC 500
	1504.4.1	Wind resistance	FM 4474 or UL 1897
	1504.7	Impact resistance	FM 4470
	1505.1	Fire classification	UL 790
	1507.11.2	Material standard	ASTM D6163, D6164
	1507.12.2	Material standard	ASTM D6754
2023 Florida Building Code, 8th Edition	202, 423.1, 453.25.4	Impact resistance	ICC 500
	1504.3.1	Wind resistance	FM 4474
	1504.3.1	Wind resistance	UL 1897
	1504.6	Physical properties	ASTM G154
	1504.6	Physical properties	ASTM G155
	1504.7	Impact resistance	FM 4470
	1507.11.2, TAS 110	Material standard	ASTM D6163
	1507.11.2, TAS 110	Material standard	ASTM D6164
	1507.12.2, TAS 110	Material standard	ASTM D6754
	TAS 110	Resistance to Foot Traffic	TAS 114, Section 8.9
	TAS 110	Wind resistance	TAS 114, Appendix C, D or J
	TAS 110	Susceptibility Hail Damage	TAS 114, Appendix F
	TAS 110	Susceptibility to Leakage	TAS 114, Appendix G

2. PRODUCTS:

TABLE 1A: EVALUATED FIBERTITE COMPONENTS

(NEMO Certified. Consult Directory of Certified Products for production location(s))

Type	Product		Material Standard	
	Name	Thickness	Reference	Type
Roof Cover	FiberTite	36-mil	ASTM D6754	N/A
	FiberTite-SM	45, 60-mil	ASTM D6754	N/A
	FiberTite-XT	50, 60-mil	ASTM D6754	N/A
	FiberTite-Xtreme	60-mil	ASTM D6754	N/A
Roof Cover or Cap Ply	FiberTite-FB	36-mil	ASTM D6754	N/A
	FiberTite-SM FB	45, 60-mil	ASTM D6754	N/A
	FiberTite-XT FB	50, 60-mil	ASTM D6754	N/A
	FiberTite-Xtreme FB	60-mil	ASTM D6754	N/A
Vapor Barrier or Base Ply	FiberTite VBX		N/A	N/A

TABLE 1B: EVALUATED FIBERTITE COMPONENTS

(Contact contact@nemocert.com for production location(s) of non-Certified products)

Type	Product	Material Standard	
		Reference	Type
Vapor Barrier or Base Ply	FTR SBS Poly 3.0	ASTM D6164	I
	FTR SBS Poly 3.7	ASTM D6164	I
	FTR SBS Poly 4.0	ASTM D6164	I

©NEMO. All rights reserved.

TABLE 2: ACCESSORY COMPONENTS (4.1.4) *(Refer to NOA if listed version was superseded to ensure use of latest version)*				
TYPE	FIBERTITE PRODUCT	ACCEPTABLE ALTERNATE	FBC	NOA
ROOFING FASTENERS & PLATES	FiberTite #12	Dekfast DF-#12-PH3	FL20311	22-0913.02
	FiberTite #14	Dekfast DF-#14-PH3	FL20311	22-0913.02
	FiberTite Magnum Fastener	Dekfast DF-#15-PH3	FL20311	22-0913.02
	FiberTite Magnum-Plus Plate	Dekfast PLT-O2-3/4-12B	FL20311	22-0913.02
	FTR Magnum2S	Dekfast PLT-R-2-3/8-6B	FL20311	22-0913.02
	FiberTite 3-in Steel Plate	Dekfast PLT-R-3	FL20311	22-0913.02
	FTR-IW isoweld	*isoweld* F1-P-6.8-PVC	FL20311	22-0913.02
	FiberTite Magnum Stress Plate	Dekfast PLT-O-2-1/2-8B	N/A	N/A
	N/A	Dekfast PTL-R-2-4B	FL20311	22-0913.02
	N/A	Dekfast PLT-H-2-7/8	FL20311	22-0913.02
	N/A	Dekfast DF-#12-PC-SQ3	FL20311	N/A
	N/A	SFS FI-P-16.0-PVC	N/A	N/A
	N/A	SFS FI-R-20[2]	N/A	N/A
	FTR Magnum O Fastener	OMG XHD	FL699	24-0627.03
	FTR Retro-Driller	OMG RhinoBond (Retro) Driller	FL699	24-0627.03
	N/A	OMG #12 Standard	FL699	24-0627.03
	N/A	OMG Heavy Duty	FL699	24-0627.03
	N/A	OMG CD-10	FL699	24-0627.03
	N/A	OMG Polymer GypTec Fastener	FL699	24-0627.03
	N/A	OMG 3” Galvalume Steel Plate	FL699	24-0627.03
	N/A	OMG AccuTrac Flat Bottom Plate	FL699	24-0627.03
	N/A	OMG Polymer GypTec Plate 2” with barbs	FL699	24-0627.03
	N/A	OMG RhinoBond Insulation Plate (PVC)	FL699	24-0627.03
	N/A	OMG RhinoBond TreadSafe Plate (PVC)	FL699	24-0627.03
	N/A	OMG RhinoBond TreadSafe Insert[1]	N/A	N/A
	N/A	Trufast ¼” Concrete Spike	FL4500	N/A
	N/A	Trufast TL Fastener	FL4500	25-0129.08
	N/A	Trufast Versa-Fast Fasteners	FL4500	25-0129.08
	N/A	Trufast #12 DP Fastener	FL4500	25-0129.08
	FTR PurlinT Fastener	Trufast #12 Purlin Fastener	FL4500	25-0129.08
	FTR #14T	Trufast #14 HD Fastener	FL4500	25-0129.08
	FTR MagnumT Fastener	Trufast #15 EHD Fastener	FL4500	25-0129.08
	FiberTite FTR Magnum-R275	Trufast 2-3/4” Barbed Metal Seam Plate (EHD)	FL4500	N/A
	FTR IPM T	Trufast 3” Metal Insulation Plate	FL4500	25-0129.08
	N/A	Trufast Versa-Fast Metal Plate	FL4500	25-0129.08
	N/A	Trufast 2” TL Seam Plate	N/A	25-0129.08

[1] *When using OMG RhinoBond TreadSafe Insert or SFS FI-R-20 insert tube, the insulation shall be of sufficient thickness to accommodate the length of the insert/sleeve without damage thereto during installation.*

©NEMO. All rights reserved.

TABLE 2: ACCESSORY COMPONENTS (4.1.4) *(Refer to NOA if listed version was superseded to ensure use of latest version)*				
TYPE	FIBERTITE PRODUCT	ACCEPTABLE ALTERNATE	FBC	NOA
INSULATIONS	FTR-Value A	ACFoam-II	FL17989	24-1120.02
	FTR-Value-III-A	ACFoam-III	FL17989	24-1120.02
	FTR-Value H	H-Shield	FL5968	24-1021.04
	FTR-Value H Glass Facer	H-Shield CG	FL5968	24-1021.04
	FTR-Value	ENRGY 3	FL4205	24-0610.04
	N/A	Insulfoam IX	FL29563	24-1015.10
	N/A	DensDeck	FL1250	22-1223.04
	N/A	DensDeck Prime / DensDeck StormX Prime	FL1250	22-1223.04
	N/A	DEXcell FA Glass Mat Roof Board	FL17840	25-0722.11
	N/A	DEXcell Cement Roof Board	FL17840	25-0722.11
	N/A	SECUROCK Gypsum-Fiber Roof Board	FL4264	25-1017.02
	N/A	SECUROCK Cement Roof Board	FL4264	25-1017.02
	N/A	Celcore Cellular Concrete	FL2037	24-0906.02
	N/A	Concrecel Lightweight Insulating Concrete	FL5584	21-1229.06
	N/A	Elastizell Lightweight Insulating Concrete	N/A	23-0817.05
	N/A	Mearlcrete	FL13492	24-0514.06
ADHESIVES	FTR-190e	N/A	N/A	25-0722.06
	FTR-290	N/A	N/A	25-0722.06
	FTR-390	N/A	N/A	25-0722.06
	FTR-490	N/A	N/A	25-0722.06
	FTR SBS Adhesive	N/A	N/A	25-0722.06
	Alpha-Tite Bonding Adhesive	N/A	N/A	N/A
	FTR 601	Millennium One Step Foamable Adhesive	FL1800	25-0908.08
	FTR-601 PG	Millennium PG-1 Pump Grade Adhesive	FL1800	25-0908.08
	FTR-601 ECO	Millennium PG-1 EF ECO	FL1800	25-0908.08
	N/A	OlyBond 500	FL1608	24-0422.18
	N/A	Polyset Commercial Roof Adhesive	FL1365	23-0718.11
PRIMERS	FTR SA Primer	ELASTOCOL Stick Zero	FL9779	23-1130.04
	N/A	ELASTOCOL Stick	FL9779	23-1130.04
	N/A	TruGround Conductive Primer	N/A	N/A
ROLL GOODS	VaporTite	SOPRAVAP'R	N/A	24-0610.08
	FTR SBS Poly SA	SOPRALENE Stick	FL3915	24-1003.03
	N/A	BlockShield SA Plus	FL46829	N/A
	N/A	SlopeShield Plus SA	FL46829	N/A

©NEMO. All rights reserved.

3. INSTALLATION:

3.1 **FiberTite Roof Systems** shall be installed in accordance with **Seaman Corporation** published installation instructions, subject to the Limitations of Use noted herein.

3.1.1 Fasteners: Unless otherwise noted, fasteners and stress plates shall be as follows, used in any combination. Fasteners shall be of sufficient length for the following engagements.

TABLE 3: FASTENER REFERENCES

ROOF DECK	FASTENER OPTIONS				FASTENER ENGAGEMENT
WOOD, ENGINEERED SHEATHING OR PLANK	FiberTite #12	OMG #12 Standard	SFS Dekfast DF-#12-PH3	Trufast #12 DP	Min. 0.75-inch penetration (engineered sheathing) or min. 1-inch embedment (plank)
	FiberTite #14	OMG Heavy Duty	SFS Dekfast DF-#14-PH3	Trufast #14 HD	
	FiberTite Magnum Fastener	OMG XHD	SFS Dekfast DF-#15-PH3	Trufast #15 EHD	
	FTR Magnum O Fastener				
	FTR MagnumT Fastener				
	PLATE OPTIONS				
	FiberTite 3-in Steel Plate, OMG 3" Galvalume Plate, SFS Dekfast PLT-R-3 or Trufast 3" Metal Insulation Plate				
STEEL	**FASTENER OPTIONS**				Min. 0.75-inch penetration
	FiberTite #12	OMG #12 Standard	SFS Dekfast DF-#12-PH3	Trufast #12 DP	
	FiberTite #14	OMG Heavy Duty	SFS Dekfast DF-#14-PH3	Trufast #14 HD	
	FiberTite Magnum Fastener	OMG XHD	SFS Dekfast DF-#15-PH3	Trufast #15 EHD	
	FTR Magnum O Fastener				
	FTR MagnumT Fastener				
	PLATE OPTIONS				
	FiberTite 3-in Steel Plate, OMG 3" Galvalume Plate, SFS Dekfast PLT-R-3 or Trufast 3" Metal Insulation Plate				
STRUCTURAL CONCRETE	**FASTENER OPTIONS**				Non-HVHZ: Min. 1-inch embedment HVHZ: Min. 1.25-inch embedment
	FiberTite #14	OMG Heavy Duty	SFS Dekfast DF-#14-PH3	Trufast #14 HD	
		OMG CD-10D	SFS Dekfast DF-#15-PH3	Trufast ¼" Concrete Spike	
	PLATE OPTIONS				
	FiberTite 3-in Steel Plate, OMG 3" Galvalume Plate, SFS Dekfast PLT-R-3 or Trufast 3" Metal Insulation Plate				

3.1.2 Insulation:

(a) Unless otherwise noted, insulation may be any one layer or combination of Approved board(s) that meet IBC, FBC 1505 or FBC HVHZ 1516 and, for foam plastic, IBC or FBC Chapter 26, when installed with the roof cover.

(b) For Structural Concrete Deck or Recover Applications using System Type C-1 the base insulation layer is optional and using System Type C-2, D-1 or D-2, the insulation is optional. Alternatively, an Approved insulation board or coverboard may be used as a separation layer. Board products shall be preliminarily attached prior to roof cover installation. The separator component shall be documented as meeting IBC, FBC 1505 or FBC HVHZ 1516 and, for foam plastic, IBC, FBC Chapter 26, when installed with the roof cover in Recover applications.

(c) Minimum 200 psi, minimum 2-inch thick Approved lightweight insulating concrete may be substituted for, or installed below, rigid insulation board for System Types B-1, C-1, C-2, D-1 or D-2, whereby fasteners are installed through the lightweight insulating concrete to engage the structural deck. The structural deck shall be of equal or greater type, thickness and strength to the steel and structural concrete deck listings. Roof decks and structural members shall be in accordance with applicable Code requirements to the satisfaction of the Authority Having Jurisdiction. This is a wind uplift resistance allowance and does not purport to address non-wind-uplift-related issues, such as deck venting or moisture levels within the LWIC and the potential effect on overlying components.

©NEMO. All rights reserved.

(d) Florida Specific: Lightweight insulating concrete (LWIC) shall be cast in accordance with FBC Section 1917 to the satisfaction of the Authority Having Jurisdiction. For systems where specific LWIC is referenced, refer to current LWIC Florida Product Approval or NOA for specific deck construction and limitations. Unless otherwise noted, for systems where specific LWIC is not referenced, the minimum design mix shall be 300 psi. In all cases, the minimum top-coat thickness is 2-inches. For LWIC over structural concrete, reference is made to FBC Section 1917.4.1, Point 1. For "pre-existent" LWIC references, listings were established through testing over lightweight concrete cast using only foaming agent (ASTM C896), water and Portland cement (ASTM C150), with no proprietary additives, in accordance with procedures adopted by Miami-Dade BCCO (FBC CER1592). Use of these listings in new construction or re-roof (tear-off) applications is at the discretion of the Designer or Record and Authority Having Jurisdiction.

(e) Unless otherwise noted, rigid board insulation or coverboard attachment patterns for Type B-1, B-2 and C-1 systems are as outlined below.

TABLE 4A: INSULATION ATTACHMENT PATTERNS – 4X4 FT BOARDS

1 per 4.0 ft² (4 per board)	1 per 2.7 ft² (6 per board)	1 per 2.0 ft² (8 per board)	1 per 1.8 ft² (9 per board)
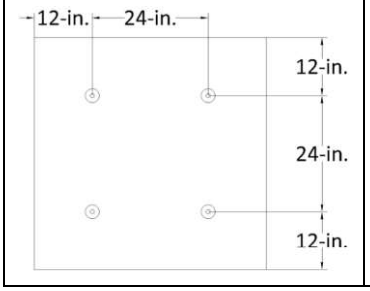	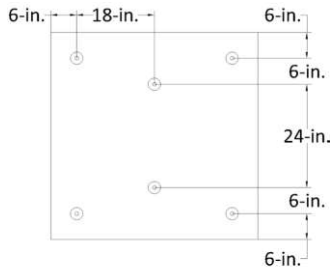	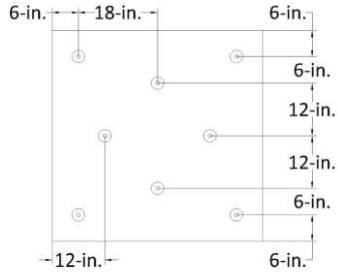	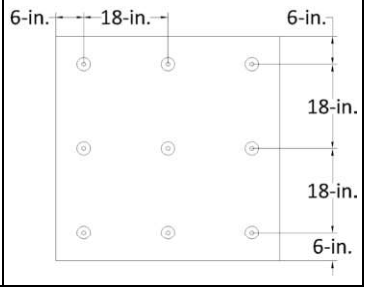

TABLE 4B: INSULATION ATTACHMENT PATTERNS – 4X8 FT BOARDS

1 per 4.0 ft² (8 per board)	1 per 2.7 ft² (12 per board)	1 per 2.3 ft² (14 per board)	1 per 2.0 ft² (16 per board)
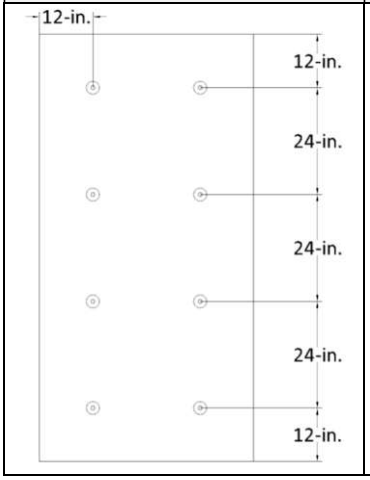	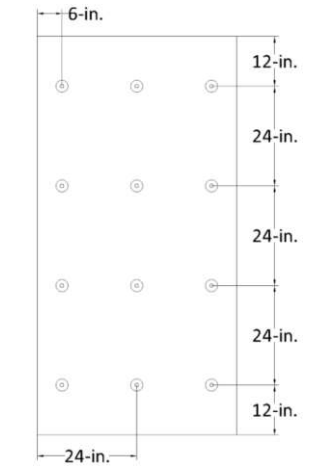	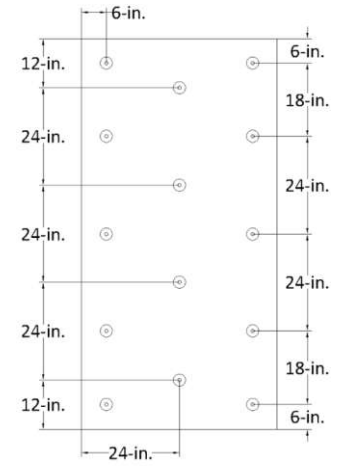	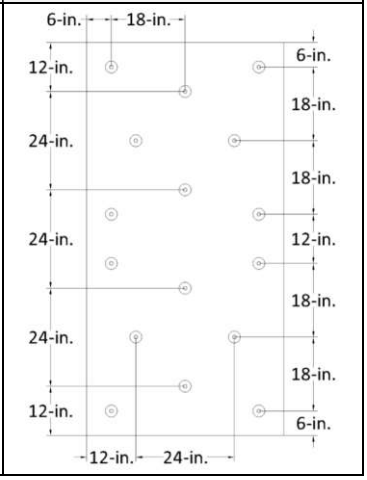

(f) Preliminary insulation attachment:

- IBC, FBC Non-HVHZ: Unless otherwise noted, use FBC Approved (Local or Statewide) roofing fasteners and plates and refer to Section 2.2.10.1.3 of FM Loss Prevention Data Sheet 1-29.
- FBC HVHZ: Unless otherwise noted, use FBC HVHZ Approved roofing fasteners and plates minimum four fasteners per 4 x 8 ft board or minimum two fasteners per 4 x 4 ft board.

©NEMO. All rights reserved.

3.1.3 Insulation Adhesives:

(a) Unless otherwise noted, insulation adhesive application rate is continuous ribbons, maximum 12-inch o.c. Ribbons shall be applied and insulation boards shall be set in accordance with the manufacturer's published instructions. When multiple layers(s) of insulation and/or coverboard are installed in ribbon-applied adhesive, boards shall be staggered from layer-to-layer. The maximum edge distance from the adhesive ribbon to the edge of the insulation board shall be not less than one-half the specified ribbons spacing.

- When applied to profiled steel roof deck, ribbons shall be applied to the top-flange so as to establish positive-contact with the overlying insulation board.
- Concrete deck shall be primed with ASTM D41 primer prior to asphalt-application

TABLE 5: INSULATION ADHESIVE REFERENCES

BY	ADHESIVE	REFERENCE	RATE
Seaman Corporation	FTR 601	FTR 601	Continuous ribbons, max. 12-inch o.c.
	FTR-601 PG	FTR-601 PG	Continuous ribbons, max. 12-inch o.c.
	FTR-601 ECO	FTR-601 ECO	Continuous 1 to 1.5-inch ribbons, 12-inch o.c.
OMG	OlyBond 500	OB500	Continuous ribbons, max. 12-inch o.c.
ICP Construction	Polyset Commercial Roof Adhesive	Polyset CRA	Continuous ribbons, max. 12-inch o.c.
Generic	ASTM D312, Type IV asphalt	hot asphalt	Full-coverage at 25-30 lbs/square

(b) Unless otherwise noted, all adhered insulations are flat-stock or taper board of the minimum thickness noted. Tapered polyisocyanurate at the following thickness limitations may be substituted with the following Maximum Design Pressure (MDP) limitations. In no case shall these values be used to 'increase' the MDP listings in the tables; rather if MDP listing below meets or exceeds that listed for a particular system in the tables, then the thinner board listed below may be used as a drop-in for the equivalent thicker material listed in the selected assembly.

TABLE 6: MDP LIMITATIONS FOR TAPERED POLYISOCYANURATE INSULATIONS

ADHESIVE	INSULATION	MIN. TAPERED THICKNESS (IN)	MDP (psf)
FTR 601 or FTR-601 PG	Any listed polyisocyanurate herein	0.5	-360.0
OB500	FTR-Value or FTR-Value H	0.5	-315.0
OB500	FTR-Value A	0.5	-487.5
Polyset CRA	Any listed polyisocyanurate herein	1.0	-117.5

(c) Adhered Insulation, Board Size:

- IBC, FBC Non-HVHZ: Unless otherwise noted, refer to Section 2.2.10.6.2 of FM Loss Prevention Data Sheet 1-29.
- FBC HVHZ: Bonded polyisocyanurate insulation boards shall be maximum 4 x 4 ft.

3.1.4 Roof Covers:

(a) For bonded membrane applications, unless otherwise noted, refer to the following.

TABLE 7: MEMBRANE / ADHESIVE COMBINATIONS

REFERENCE	LAYER	MATERIAL	APPLICATION		
			ADHESIVE	METHOD	RATE
BB1-190E	Roof Cover:	FiberTite, or FiberTite XT	FTR-190e	Contact application	1.0 gallon/square per surface
BB2-190E	Roof Cover:	FiberTite-SM or FiberTite XTreme			
BB3-ATBA	Roof Cover:	FiberTite, or FiberTite XT	Alpha-Tite Bonding Adhesive	Contact application	0.83 to 1.0 gallon/square per surface, depending on substrate porosity
BB4-ATBA	Roof Cover:	FiberTite-SM or FiberTite XTreme			
FB1-290	Roof Cover:	FiberTite-FB, -SM FB, -XT FB or -XTreme FB	FTR-290	Wet lay	1.0 gallon/square
FB2-390	Roof Cover or Cap Ply:	FiberTite-FB, -SM FB, -XT FB or -XTreme FB	FTR-390	Wet lay	1.67 to 2.5 gallon/square, depending on substrate porosity
FB3-490	Roof Cover:	FiberTite-FB, -SM FB, -XT FB or -XTreme FB	FTR-490	Wet lay	0.85 to 1.0 gallon/square, depending on substrate porosity
FB4-HA	Roof Cover or Cap Ply:	FiberTite-FB, -SM FB, -XT FB or -XTreme FB	hot asphalt	Wet lay	25-30 lbs/square

©NEMO. All rights reserved.

TABLE 7: MEMBRANE / ADHESIVE COMBINATIONS					
REFERENCE	LAYER	MATERIAL	APPLICATION		
			ADHESIVE	METHOD	RATE
FB5-CR20	Roof Cover or Cap Ply:	FiberTite-FB, -SM FB, -XT FB or -XTreme FB	ICP Adhesives "Polyset Commercial Roof Adhesive"	Wet lay	Spatter-applied, full coverage
FB6-601PG	Roof Cover or Cap Ply:	FiberTite-FB, -SM FB, -XT FB or -XTreme FB	FTR-601 PG	Wet lay	Spatter-applied, 4.0 lbs/square
FB7-CEFA	Roof Cover or Cap Ply:	FiberTite-FB, -SM FB, -XT FB or -XTreme FB	SOPREMA "COLPLY EF Adhesive"	Wet lay	2.0 gallon/square
FB8-601ECO	Roof Cover or Cap Ply:	FiberTite-FB, -SM FB, -XT FB or -XTreme FB	FTR-601 ECO	Wet lay	Spatter-applied, 4.0 lbs/square
BP1-HA	Vapor Barrier, Base Ply or Ply:	FTR SBS Poly 3.0, FTR SBS Poly 3.7 or FTR SBS Poly 4.0	Hot asphalt	Wet lay (substrate)	25-30 lbs/square
BP2-FTRSBSA	Vapor Barrier, Base Ply or Ply:	FTR SBS Poly 3.0, FTR SBS Poly 3.7 or FTR SBS Poly 4.0	FTR SBS Adhesive	Wet lay (substrate)	1.5-2.0 gallon/square, depending on substrate porosity
BP3-CEFA	Vapor Barrier, Base Ply or Ply:	FTR SBS Poly 3.0, FTR SBS Poly 3.7 or FTR SBS Poly 4.0	SOPREMA "COLPLY EF Adhesive"	Wet lay (substrate)	1.5-2.0 gallon/square, depending on substrate porosity
BP4-TA	Vapor Barrier, Base Ply or Ply:	FTR SBS Poly 3.0, FTR SBS Poly 3.7 or FTR SBS Poly 4.0	torch-applied	torch-applied	full-bond
Notes:	Cellular lightweight insulating concrete may be optionally primed with DETEC "TruGround Conductive Primer" prior to application of subsequent FB6-601PG membranes.				
	The following substrates may be optionally primed with DETEC "TruGround Conductive Primer" prior to application of subsequent BB1-190E, BB2-190E, BB3-ATBA or BB4-ATBA membranes. ✓ DEXcell FA Glass Mat Roof Board, SECUROCK Gypsum-Fiber Roof Board or DensDeck Prime, ✓ SECUROCK Cement Roof Board, ✓ Polyisocyanurate (cellulose-face and coated-glass faced) boards.				

(b) For single-ply membranes in System Type D-1 steel deck applications, the roof membrane shall be run with its length perpendicular to the steel deck flutes. Seaman Corporation offers two (2) 'styles' of attachment; "Open" and "Closed", as detailed below.

TABLE 8: FIBERTITE MEMBRANE ATTACHMENT 'STYLES'			
"OPEN" ATTACHMENT		"CLOSED" ATTACHMENT	
"Open" attachment involves a 5-inch lap with a 1½-inch factory-weld or field-weld. The stress plates and fasteners are installed with the centerline located 1½-inch from the underlying membrane edge. Attachment is expressed as follows: Open: <maximum fastener spacing> x <maximum lap spacing>.	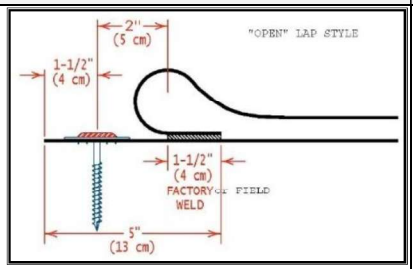	"Closed" attachment involves either a 6-inch lap with a 1½-inch factory-weld with the stress plates and fasteners located along the centerline of the lap, followed by a 1½-inch field-weld, or stress plate and fastener placement through the field of the membrane and covered with a 6-inch wide strip of FiberTite membrane with 1½-inch field welds on both sides. Attachment is expressed as follows: Closed: <max fastener spacing> x <max row spacing>.	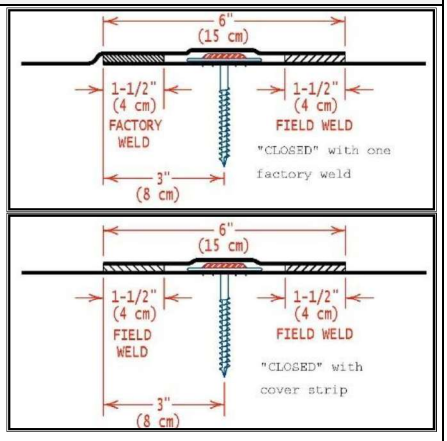

(c) For System Type C-2 (induction weld), care shall be taken to ensure that the plates do not line-up with membrane seams. This condition may preclude proper induction welding of the membrane to the plates.

©NEMO. All rights reserved.

3.1.5 Vapor Barriers:

(a) For System Types B-1, B-2, C-1, C-2, D-1 or Type D-2, an optional thermal barrier and/or self-adhering vapor barrier membrane, such as VaporTite or FTR SBS Poly SA, may be installed atop the roof deck prior to installation of the insulation and roof cover. Refer to FM Loss Prevention Data Sheet 1-29 for design and installation recommendations and limitations.

(b) FiberTite VBX, mechanically attached using FiberTite #14 fasteners or FiberTite Magnum fasteners (steel only) with FiberTite Magnum-Plus Seam Plates spaced 24-in. o.c. within the 8-in. wide side laps; laps sealed with 1.5-in. heat weld, may be optionally installed over wood, steel or structural concrete deck or over lightweight concrete over steel or structural concrete deck (attached through the LWC to engage the structural deck) in the following system types, to a MDP of -82.5 psf.

- ✓ System Types B-1 and C-1.
- ✓ System Type C-2 with any grid pattern, or with row spacing not to exceed 60-inch o.c.
- ✓ System Type D-1 with row spacing not to exceed 60-inch o.c.

(c) Refer to Section 4.3 herein for options where the vapor barrier forms part of the load path.

3.1.6 Hurricane Storm Shelters:

(a) Refer to Table 10 for systems having met ICC 500 impact resistance requirements for use on Hurricane Storm Shelters

(b) Unless otherwise noted, sub-assembly components may be adhered or mechanically attached

4. LIMITATIONS OF USE:

4.1 General:

4.1.1 This is a building code evaluation. NEMO CERT, LLC is not, in any way, the Designer of Record for any project on which this NER, or previous versions thereof, is/was used for permitting or design guidance. NERs are not to be construed as representing any attributes not specifically listed, nor are NERs to be construed as an endorsement of the subject of the report or a recommendation for its use. There is no warranty by NEMO CERT, LLC, express or implied, as to any finding or other matter in this report, or as to any product covered by the report.

4.1.2 Roof Decks:

(a) This NER pertains to above-deck roof components. Roof decks and structural members shall be in accordance with FBC requirements to the satisfaction of the Authority Having Jurisdiction.

(b) OSB sheathing is not permitted in FBC HVHZ jurisdictions.

(c) Unless otherwise noted, reference to 'structural concrete' pertains to min. 2,500 psi structural concrete, and excludes 'structural lightweight concrete'.

(d) FBC HVHZ Specific: The table below lists various 'as-tested' deck conditions in accordance with Testing Application Standard TAS 114(J). In no case shall these values be used to 'increase' the MDP listings for the selected systems; the lesser MDP applies.

TABLE 9 AS-TESTED DECK ATTACHMENT DETAILS (TAS 114, APPENDIX J)

TYPE	AS TESTED SUB-ASSEMBLY			
	SPAN (INCH O.C.)	FASTENER	SPACING (INCH O.C.)	MDP (psf)
15/32-inch APA rated CDX plywood	Span: 24 Blocking: 48	#8 wood screws	6	-112.5
19/32-inch APA rated CDX plywood	Span: 24 Blocking: 48	#8 wood screws	6	-75.0
	24	8d ring shank nails	6	-90.0
20 ga., Type B, Grade 33 steel	60	#12 HWH Teks 5	6	-90.0
22 ga., Type B, Grade 33 steel	48	#12 HWH Teks 5	6	-82.5
	60	5/8" puddle welds	6	-112.5
	72	12-24 x 1¼ HWH Impax 45 screws	6	-67.5
	72	SFS SD5-#12-HW5/16 with ¾-inch steel washers	6	-82.5
	72	#12 HWH Tek 5	6	-105.0
	72	5/8" puddle welds	6	-105.0

©NEMO. All rights reserved.

TABLE 9 AS-TESTED DECK ATTACHMENT DETAILS (TAS 114, APPENDIX J)				
TYPE	AS TESTED SUB-ASSEMBLY			
	SPAN (INCH O.C.)	FASTENER	SPACING (INCH O.C.)	MDP (psf)
22 ga., Type B, Grade 40 steel	72	#12 HWH Tek 5	6	-90.0
	72	#12 HWH Tek 5 with ¾-inch washers	6	-105.0
	72	5/8-inch puddle welds	6	-127.5
18 ga., Type B, Grade 50 steel	72	#12 HWH Teks 5 with ¾-inch washers	6	-157.5
22 ga., Type B, Grade 50 steel	72	5/8-inch puddle welds.	6	-45.0
18 ga., Type N, Grade 60 steel	120	Two (2) Hilti X-ENP-19	8	-127.5
18 ga., Type B, Grade 80 steel	92	5/8-inch puddle welds and ¼-inch X 20 Daggerz Hex Washer Head screw with ¾-inch flat washer	Weld: 12 Screw: 6	-120.0
22 ga., Type B, Grade 80 steel	60	5/8" puddle welds	6	-75.0
	60	#12 HWH Teks 5	6	-97.5
	60	#12 HWH Tek 5 with ¾-inch washers	6	-202.5
	72	12-24 x 1¼ HWH Impax screws	6	-45.0
	72	12-24 x 1¼ HWH Impax 45 screws	6	-52.5
	72	#12 HWH Teks 5	6	-112.5
	72	#12 HWH Teks 5 with ¾-inch washers	6	-157.5
Note:	Steel deck stress analysis is the responsibility of others to the satisfaction of the Authority Having Jurisdiction			

4.1.3 Hurricane Storm Shelters:

(a) This section of the NER covers use of the subject product on Hurricane Storm Shelters, and does not purport to evaluate for use on Emergency Shelters.

(b) Roof assemblies shall be designed using design wind speeds set forth in ICC-500, and be tested to minimum 1.2 times design pressure.

(c) Refer to Table 10 for systems having met ICC 500 impact resistance requirements for use on Hurricane Storm Shelters.

TABLE 10: IMPACT RESISTANT ASSEMBLIES PER ICC-500 HURRICANE STORM SHELTERS				
SHELTER TYPE:	Hurricane			
SURFACE TYPE:	Horizontal (roof)			
Missile size:	9 lb 2x4			
Design Wind Speed:	220 mph			
Missile speed:	0.10 x design wind speed = 22 mph			
Criteria 1:	No missile penetration through deck, per ICC-500			
Criteria 2:	No missile penetration through roof cover			
System no.	**Deck**	**Insulation (3.1.6a)**	**Coverboard**	**Roof Cover (3.1.4)**
H-1.	Min. 22 ga., Type B, Grade 40 steel at min. 6 ft span or structural concrete	One or more layer(s), Min. 1.5-inch FTR-Value A, FTR-Value-III-A, FTR-Value, FTR-Value H	Min. 0.5-inch SECUROCK Gypsum-Fiber Roof Board	BB1-190E, BB2-190E, BB3-ATBA, BB4-ATBA
H-2.	Min. 22 ga., Type BV, Grade 40 steel at min. 6 ft span or structural concrete	Min. 460 psi, min. 2-inch thick cellular lightweight concrete	None	FB1-290, FB2-390, FB3-490, FB4-HA, FB5-CR20, FB6-601PG, FB7-CEFA, FB8-601ECO

©NEMO. All rights reserved.

4.1.3 Fire Classification:

(a) Refer to **IBC, FBC 1505, FBC HVHZ 1516, UL TGFU.R10117** and the fire classification certificate for the roof cover manufacturer for requirements and limitations regarding roof assembly fire classification.

(b) Refer to **IBC or FBC 2603** for requirements and limitations concerning the use of foam plastic insulation.

4.1.4 Quality Assurance:

All components in the roof assembly shall have quality assurance surveillance. For Florida Product Approval, this shall be in accordance with **F.A.C. Rule 61G20-3**. For components listed herein that are produced by a manufacturer other than the report holder on Page 1 of this NER, refer to the supporting evidence held by the component manufacturer.

4.2 **Jurisdiction Specific:**

	IBC, FBC Non-HVHZ	HVHZ
4.2.1	This NER does not include evaluation of roof edge termination. Refer to **IBC 1504.6 or FBC 1504.5** for requirements and limitations regarding edge securement for low-slope roofs.	This NER does not include evaluation of roof edge termination. Refer to **RAS 111** for requirements and limitations regarding edge securement for low-slope roofs.
4.2.2	Refer to **IBC 1512 or FBC 1511** for requirements and limitations regarding recover installations.	Refer to **FBC HVHZ 1521** for requirements and limitations regarding recover installations.
	(a) For mechanical attachment to existing roof decks, fasteners shall be tested for withdrawal resistance. A qualified design professional shall review the data for comparison to the minimum requirements for the system. Testing shall be in accordance with **ANSI/SPRI FX-1** or **TAS 105**.	For mechanical attachment to existing roof decks, fasteners shall be tested for withdrawal resistance. A qualified design professional shall review the data for comparison to the minimum requirements for the system. Testing shall be in accordance with **TAS 105**.
	(b) For adhered re-roof (tear off) installation, the existing substrate shall be examined for compatibility with the adhesive. If any surface conditions exist that bring system performance into question, field uplift testing in accordance with **ANSI/SPRI IA-1**, **FM Loss Prevention Data Sheet 1-52** or **TAS 124** shall be conducted on mock-ups of the proposed interface.	For adhered re-roof (tear off) installation, the existing substrate shall be examined for compatibility with the adhesive to be installed. If any surface conditions exist that bring system performance into question, field uplift testing in accordance with **TAS 124** shall be conducted on mock-ups of the proposed interface.
	(c) For adhered recover installation, the existing roof system shall meet project design pressure requirements on its own merit to the satisfaction of the Authority Having Jurisdiction, as documented through field uplift testing in accordance with **FM Loss Prevention Data Sheet 1-52** or **TAS 124**.	For adhered recover installation, the existing roof system shall meet project design pressure requirements on its own merit to the satisfaction of the Authority Having Jurisdiction, as documented through field uplift testing in accordance with **TAS 124**.
4.2.3	Wind Load Resistance:	
	(a) Refer to Section 4.3 for a tabulated summary of assembly listings and maximum allowable design pressures.	
	(b) "MDP" = Maximum Design Pressure is the result of testing for wind load resistance based on allowable wind loads, and reflects the ultimate passing pressure divided by 2 *(the 2 to 1 margin of safety per **FBC 1504.9** has already been applied)*. Refer to **IBC, FBC 1609** for determination of design wind loads.	"MDP" = Maximum Design Pressure is the result of testing for wind load resistance based on allowable wind loads, and reflects the ultimate passing pressure divided by 2 *(the 2 to 1 margin of safety per **TAS 114** has already been applied)*. Refer to **FBC HVHZ 1620** or **RAS 128** for determination of design wind loads.

©NEMO. All rights reserved.

IBC, FBC Non-HVHZ	HVHZ
(c) The MDP for the selected assembly shall meet or exceed at least the Zone 1 PRIME design pressure determined in accordance with **IBC, FBC Chapter 16**. Elevated pressure zones shall employ an attachment density designed by a qualified design professional to resist the elevated pressure criteria. Commonly used methods are **ANSI/SPRI WD1**, **FM Loss Prevention Data Sheet 1-29**, **RAS 117** and **RAS 137**. Assemblies marked with an asterisk* carry the limitations set forth in **Section 2.2.10.1 of FM Loss Prevention Data Sheet 1-29** for Zone 2/3 enhancements.	The MDP for the selected assembly shall meet or exceed at least the Zone 1 PRIME design pressure determined in accordance with **FBC HVHZ 1620** or **RAS 128**. Elevated pressure zones shall employ an attachment density designed by a qualified design professional to resist the elevated pressure criteria. Analysis shall be in accordance with **RAS 117** or **RAS 137**.
(d) For fully-adhered installations, the maximum design pressure for the selected assembly shall meet or exceed the critical design pressure. Rational analysis is not permitted.	For assemblies marked with an asterisk*, the maximum design pressure (MDP) limitation shall be applicable to all roof pressure zones. Rational analysis is not permitted.

©NEMO. All rights reserved.

4.3 System Listings and Allowable Design Pressures: See Section 4.2.3

4.3.1 Thermal Barriers / Vapor Barriers: The lesser of the MDP listings below vs. that for the selected roof assembly from Section 4.3.2 applies.

(a) Structural Concrete Decks:

TABLE VB-1: STRUCTURAL CONCRETE DECK
VAPOR BARRIER FOLLOWED BY ADHERED INSULATION

OPTION #	PRIMER	VAPOR BARRIER		INSULATION ADHESIVE PER TABLE 13A & TABLE 13B	MDP (PSF)
		TYPE	APPLICATION		
C-VB-1.	ASTM D41	FTR SBS Poly 3.0, FTR SBS Poly 3.7 or FTR SBS Poly 4.0	hot asphalt	hot asphalt, 25-30 lbs/square	-210.0
C-VB-2.	ASTM D41	FTR SBS Poly 3.0, FTR SBS Poly 3.7 or FTR SBS Poly 4.0	torch-applied	hot asphalt, 25-30 lbs/square	-210.0
C-VB-3.	ASTM D41	Smooth-surfaced, asphalt built-up roof	hot asphalt	hot-asphalt, 25-30 lbs/square	-375.0
C-VB-4.	None	FTR SBS Poly 3.0	FTR SBS Adhesive, continuous ribbons, 12-inch o.c.	FTR 601 or FTR-601 PG, ribbons 12-inch o.c.	-75.0
C-VB-5.	None	FTR SBS Poly 3.7	FTR SBS Adhesive, continuous ribbons, 12-inch o.c.	FTR 601 or FTR-601 PG, ribbons 12-inch o.c.	-105.0
C-VB-6.	FTR SA Primer	VaporTite or FTR SBS Poly SA	self-adhering	FTR 601, FTR-601 PG or FTR-601 ECO, ribbons 12-inch o.c.	-180.0
C-VB-7.	None	BlockShield SA	self-adhering	FTR 601 or FTR-601 PG, ribbons 12-inch o.c.	-185.5
C-VB-8.	ELASTOCOL Stick	VaporTite or FTR SBS Poly SA	self-adhering	FTR 601, FTR-601 PG or FTR-601 ECO, ribbons 12-inch o.c.	-210.0
C-VB-9.	ASTM D41	FTR SBS Poly 3.0 or FTR SBS Poly 3.7	torch-applied	FTR-601 ECO, ribbons 12-inch o.c.	-210.0
C-VB-10.	ASTM D41	FTR SBS Poly 3.0, FTR SBS Poly 3.7 or FTR SBS Poly 4.0	hot asphalt, FTR SBS Adhesive at 1.5-2.0 gal/square or SOPREMA "COPLY EF Adhesive" at 1.5-2.0 gal/square.	FTR 601 or FTR-601 PG, ribbons 12-inch o.c.	-225.0
C-VB-11.	ASTM D41	FTR SBS Poly 3.0, FTR SBS Poly 3.7 or FTR SBS Poly 4.0	torch-applied	FTR 601 or FTR-601 PG, ribbons 12-inch o.c.	-225.0
C-VB-12.	None	SlopeShield Plus SA	self-adhering	FTR 601 or FTR-601 PG, ribbons 6-inch o.c.	-75.0
C-VB-13.	None	BlockShield SA	self-adhering	FTR 601 or FTR-601 PG, ribbons 6-inch o.c.	-202.5
C-VB-14.	ASTM D41	FTR SBS Poly 3.0, FTR SBS Poly 3.7 or FTR SBS Poly 4.0	hot asphalt, FTR SBS Adhesive at 1.5-2.0 gal/square or SOPREMA "COPLY EF Adhesive" at 1.5-2.0 gal/square.	FTR 601 or FTR-601 PG, ribbons 6-inch o.c.	-372.3
C-VB-15.	ASTM D41	FTR SBS Poly 3.0, FTR SBS Poly 3.7 or FTR SBS Poly 4.0	torch-applied	FTR 601 or FTR-601 PG, ribbons 6-inch o.c.	-372.3

©NEMO. All rights reserved.

4.3.2 Roof Assemblies:

ATTACHMENT REQUIREMENTS FOR WIND UPLIFT RESISTANCE

TABLE	DECK	APPLICATION	TYPE	DESCRIPTION	PAGE
11A	Wood	New, Reroof (Tear-Off)	A-2	Bonded Vapor Barrier, Bonded Insulation(s), Bonded Roof Cover (not for use in FBC HVHZ jurisdictions)	15
11B	Wood	New, Reroof (Tear-Off) or Recover	B-1	Mechanically Attached Base Insulation, Bonded Top Insulation(s), Bonded Roof Cover	16
11C	Wood	New, Reroof (Tear-Off)	B-2	Mechanically Attached Thermal Barrier, Bonded Vapor Barrier, Bonded Insulation(s), Bonded Roof Cover	17
11D	Wood	New, Reroof (Tear-Off) or Recover	C-1	Mechanically Attached Insulation, Bonded Roof Cover	18
11E	Wood	New, Reroof (Tear-Off) or Recover	C-2	Mechanically Attached Insulation, Induction Welded Roof Cover	20
11F	Wood	New, Reroof (Tear-Off) or Recover	D-1	Insulated, Mechanically Attached Roof Cover	21
11G	Wood	New, Reroof (Tear-Off) or Recover	D-1	Insulated, Bonded Vapor Barrier, Mechanically Attached Roof Cover	22
11H	Wood	New, Reroof (Tear-Off) or Recover	E-1	Non-Insulated, Mechanically Attached Roof Cover	22
12A	Steel	New, Reroof (Tear-Off)	A-1	Bonded Insulation(s), Bonded Roof Cover	23
12B	Steel	New, Reroof (Tear-Off)	A-2	Bonded Vapor Barrier, Bonded Insulation(s), Bonded Roof Cover	24
12C	Steel or Structural Concrete	New, Reroof (Tear-Off) or Recover	B-1	Mechanically Attached Base Insulation, Bonded Top Insulation(s), Bonded Roof Cover	25
12D	Steel or Structural Concrete	New, Reroof (Tear-Off) or Recover	B-1	Mechanically Attached Base Insulation, Bonded Top Insulation(s), Bonded Multi-Ply Roof Cover	37
12E	Steel	New or Reroof (Tear-Off)	B-2	Mechanically Attached Thermal Barrier, Bonded Vapor Barrier, Bonded Insulation(s), Bonded Roof Cover	38
12F	Steel	New or Reroof (Tear-Off)	B-2	Mechanically Attached Thermal Barrier, Bonded Vapor Barrier, Bonded Insulation(s), Bonded Multi-Ply Roof Cover	52
12G	Steel or Structural Concrete	New, Reroof (Tear-Off) or Recover	C-1	Mechanically Attached Insulation, Bonded Roof Cover	56
12H	Steel or Structural Concrete	New, Reroof (Tear-Off) or Recover	C-1	Mechanically Attached Insulation, Bonded Multi-Ply Roof Cover	63
12I	Steel	New, Reroof (Tear-Off) or Recover	C-2	Mechanically Attached Insulation, Induction Welded Roof Cover	65
12J	Steel	New, Reroof (Tear-Off) or Recover	D-1	Insulated, Mechanically Attached Roof Cover	72
13A	Structural Concrete	New or Reroof (Tear-Off)	A-1	Bonded Insulation(s), Bonded Roof Cover	76
13B	Structural Concrete	New or Reroof (Tear-Off)	A-1	Bonded Insulation(s), Bonded Multi-Ply Roof Cover	87
13C	Structural Concrete	New, Reroof (Tear-Off) or Recover	C-2	Mechanically Attached Insulation, Induction Welded Roof Cover	90
13D	Structural Concrete	New, Reroof (Tear-Off) or Recover	D-1	Insulated, Mechanically Attached Roof Cover	93
13E	Structural Concrete	New or Reroof (Tear-Off)	F	Non-Insulated, Bonded Multi-Ply Roof Cover	94
13F	Structural Concrete	New or Reroof (Tear-Off)	G	Perimeter Attached Roof Cover, Pressure Equalizing Vent	95
14A	Existing Lightweight Concrete	Reroof (Tear-Off)	A-1	Bonded Insulation(s), Bonded Roof Cover	95
14B	Lightweight Concrete	New or Reroof (Tear-Off)	A-2	Bonded Vapor Barrier, Bonded Insulation(s), Bonded Roof Cover	96
14C	Lightweight Concrete	New or Reroof (Tear-Off)	F	Non-Insulated, Bonded Roof Cover	96
15A	Cementitious Wood Fiber	New or Reroof (Tear-Off)	A-1	Bonded Insulation(s), Bonded Roof Cover	98
15B	Cementitious Wood Fiber	New or Reroof (Tear-Off)	A-1	Bonded Insulation(s), Bonded Multi-Ply Roof Cover	100
15C	Cementitious Wood Fiber	Reroof (Tear-Off) or Recover	D-1	Insulated, Mechanically Attached Roof Cover	101
16A	Existing Gypsum	Reroof (Tear-Off)	A-1	Bonded Insulation(s), Bonded Roof Cover	101
16B	Existing Gypsum	Reroof (Tear-Off)	A-1	Bonded Insulation(s), Bonded Multi-Ply Roof Cover	104
16C	Existing Gypsum	Reroof (Tear-Off)	D-1	Insulated, Mechanically Attached Roof Cover	105
17A	Various	Recover	A-1	Bonded Insulation(s), Bonded Roof Cover	105
17B	Various	Recover	A-1	Bonded Insulation(s), Bonded Multi-Ply Roof Cover	113

BACK TO TOP
LINK TO TOP OF ATTACHMENT REQUIREMENTS
©NEMO. All rights reserved.

TABLE 12J: STEEL DECKS – NEW CONSTRUCTION, REROOF (TEAR-OFF) OR RECOVER SYSTEM TYPE D-1: INSULATED, MECHANICALLY ATTACHED ROOF COVER							
System No.	Deck (4.1.2)	Insulation (3.1.2)		Roof Cover (3.1.4)			MDP (psf)
		Type	Attach	Membrane	Fastener (3.1.1, 4.2.2)	Attachment	
S-375.	Min. 22 ga., Type B, Grade 33 steel; 6 ft span	Min. 1.5-inch thick, one or more layers, any combination	Prelim. attached	FiberTite, XT, SM or Xtreme	FiberTite Magnum Fastener with FiberTite Magnum Stress Plate or FiberTite Magnum-Plus Stress Plate	Open: 12 x 51-inch	-52.5
S-376.	Min. 22 ga., Type B, Grade 33 steel; 6 ft span	Min. 1.5-inch thick, one or more layers, any combination	Prelim. attached	FiberTite, XT, SM or Xtreme	FiberTite Magnum Fastener with FiberTite Magnum Stress Plate or FiberTite Magnum-Plus Stress Plate	Open: 6 x 51-inch	-60.0
S-377.	Min. 22 ga., Type B, Grade 33 steel; 6 ft span	Min. 0.5-inch thick, one or more layers, any combination	Prelim. attached	FiberTite, XT, SM or Xtreme	FiberTite Magnum Fastener with FiberTite Magnum Stress Plate or FiberTite Magnum-Plus Stress Plate	Open: 6 x 69-inch	-52.5
S-378.	Min. 22 ga., Type B, Grade 33 steel; 6 ft span	Min. 1.5-inch thick, one or more layers, any combination	Prelim. attached	FiberTite, XT, SM or Xtreme	FiberTite Magnum Fastener with FiberTite Magnum Stress Plate or FiberTite Magnum-Plus Stress Plate	Open: 6 x 69-inch	-60.0
S-379.	Min. 20 ga., Type B, Grade 33 steel; 6 ft span	Min. 1.5-inch thick, one or more layers, any combination	Prelim. attached	FiberTite, XT, SM or Xtreme	FiberTite Magnum Fastener with FiberTite Magnum Stress Plate or FiberTite Magnum-Plus Stress Plate	Open: 6 x 51-inch	-67.5
S-380.	Min. 22 ga., Type B, Grade 33 steel; 6 ft span	Min. 1.5-inch thick, one or more layers, any combination	Prelim. attached	FiberTite, XT, SM or Xtreme	FTR-MagnumT Fastener with FTR Magnum-R275	Open: 6 x 94-inch	-67.5
OPEN STYLE, GRADE 40 STEEL:							
S-381.	Min. 22 ga., Type B, Grade 40 steel; 7 ft span; 5/8" puddle welds 6" o.c.	Min. 1.5-inch thick, one or more layers, any combination	Prelim. attached	FiberTite, XT, SM or Xtreme	FiberTite Magnum Fastener with FiberTite Magnum-Plus Stress Plate	Open: 6 x 69-inch	-45.0
OPEN STYLE, GRADE 80 STEEL:							
S-382.	Min. 22 ga., Type B, Grade 80 steel	Min. 1.5-inch thick, one or more layers, any combination	Prelim. attached	FiberTite, XT, SM or Xtreme	FTR-MagnumT Fastener with FTR Magnum-R275	Open: 18 x 954-inch	-30.0 (NO HVHZ)
S-383.	Min. 22 ga., Type B, Grade 80 steel	Min. 1.5-inch thick, one or more layers, any combination	Prelim. attached	FiberTite, XT, SM or Xtreme	FiberTite Magnum Fastener with FTR FiberTite Magnum-Plus Stress Plate	Open: 18 x 95-inch	-30.0 (NO HVHZ)
S-384.	Min. 22 ga., Type B, Grade 80 steel	Min. 1.5-inch thick, one or more layers, any combination	Prelim. attached	FiberTite, XT, SM or Xtreme	FiberTite Magnum Fastener with FiberTite Magnum Stress Plate or FiberTite Magnum-Plus Stress Plate	Open: 12 x 105-inch	-37.5 (NO HVHZ)
S-385.	Min. 22 ga., Type B, Grade 80 steel; 6 ft span	Min. 1.5-inch thick, one or more layers, any combination	Prelim. attached	FiberTite, XT, SM or Xtreme	FiberTite Magnum Fastener with FiberTite Magnum Stress Plate or FiberTite Magnum-Plus Stress Plate	Open: 18 x 51-inch	-45.0
S-386.	Min. 22 ga., Type B, Grade 80 steel; 6 ft span	Min. 1.5-inch thick, one or more layers, any combination	Prelim. attached	FiberTite, XT, SM or Xtreme	FiberTite Magnum Fastener with FiberTite Magnum Stress Plate or FiberTite Magnum-Plus Stress Plate	Open: 12 x 72-inch	-45.0

BACK TO TOP
LINK TO TOP OF ATTACHMENT REQUIREMENTS
©NEMO. All rights reserved.

TABLE 13D: STRUCTURAL CONCRETE DECKS - NEW CONSTRUCTION, REROOF (TEAR-OFF) OR RECOVER SYSTEM TYPE D-1: INSULATED, MECHANICALLY ATTACHED ROOF COVER							
System No.	Deck (4.1.2)	Insulation (3.1.2)		Roof Cover (3.1.4)			MDP (psf)
		Type	Attach	Membrane	Fastener (3.1.1, 4.2.2)	Attachment	
C-216.	Structural concrete	Min. 1.5-inch thick, one or more layers, any combination	Prelim. attached	FiberTite, XT, SM or Xtreme	FiberTite Magnum Fastener or OMG CD-10 with FTR Magnum2S Plate	Open: 6 x 72-inch	-67.5
C-217.	Structural concrete	Min. 1.5-inch thick, one or more layers, any combination	Prelim. attached	FiberTite, XT, SM or Xtreme	FiberTite Magnum Fastener or OMG CD-10 with FiberTite Magnum Stress Plate or FiberTite Magnum-Plus Stress Plate	Open: 12 x 24-inch	-82.5
C-218.	Structural concrete	Min. 1.5-inch thick, one or more layers, any combination	Prelim. attached	FiberTite, XT, SM or Xtreme	FiberTite Magnum Fastener or OMG #14 with FiberTite Magnum Stress Plate or FiberTite Magnum-Plus Stress Plate	Open: 6 x 51-inch	-112.5
CLOSED STYLE:							
C-219.	Structural concrete	Min. 1.5-inch thick, one or more layers, any combination	Prelim. attached	FiberTite, XT, SM or Xtreme	FiberTite Magnum Fastener or OMG CD-10 with FTR Magnum2S Plate	Closed: 6 x 95-inch	-45.0
C-220.	Structural concrete	Min. 1.5-inch thick, one or more layers, any combination	Prelim. attached	FiberTite, XT, SM or Xtreme	FiberTite Magnum Fastener or OMG CD-10 with FTR Magnum2S Plate	Closed: 6 x 144-inch	-52.5
C-221.	Structural concrete	Min. 1.5-inch thick, one or more layers, any combination	Prelim. attached	FiberTite, XT, SM or Xtreme	FiberTite Magnum Fastener or OMG CD-10 with FiberTite Magnum Stress Plate or FiberTite Magnum-Plus Stress Plate	Closed: 6 x 94-inch	-82.5
C-222.	Structural concrete	Min. 1.5-inch thick, one or more layers, any combination	Prelim. attached	FiberTite, XT, SM or Xtreme	FiberTite Magnum Fastener or OMG CD-10 with FiberTite Magnum Stress Plate or FiberTite Magnum-Plus Stress Plate	Closed: 6 x 104.5-inch	-90.0
C-223.	Structural concrete	Min. 1.5-inch thick, one or more layers, any combination	Prelim. attached	FiberTite, XT, SM or Xtreme	FiberTite Magnum Fastener or OMG CD-10 with FiberTite Magnum Stress Plate or FiberTite Magnum-Plus Stress Plate	Closed: 6 x 47-inch	-112.5

TABLE 13E: STRUCTURAL CONCRETE DECKS - NEW CONSTRUCTION OR REROOF (TEAR-OFF) SYSTEM TYPE F: NON-INSULATED, BONDED MULTI-PLY ROOF COVER*					
System No.	Deck (4.1.2)	Roof Cover (3.1.4)			MDP (psf)*
		Base Ply	Ply	Cap Ply	
C-224.	Structural concrete	None	N/A	FB6-601PG	-112.5
C-225.	Structural concrete primed; ASTM D41	BP1-HA, BP2-FTRSBSA, BP3-CEFA or BP4-TA	(Optional) BP1-HA, BP2-FTRSBSA, BP3-CEFA or BP4-TA	FB4-HA, FB5-CR20, FB6-601PG or FB7-CEFA	-167.5
C-226.	Structural concrete	None	None	FB2-390	-237.5
C-227.	Structural concrete primed; ASTM D41	SOPREMA “Elastophene SP 2.2” or “Elastophene SP 3.0”, torch-applied	None	FB2-390	-320.0
C-228.	Structural concrete sealed; PVA	None	N/A	FB1-290	-377.0
C-229.	Structural concrete	None	N/A	FB3-490	-442.5
C-230.	Structural concrete	None	N/A	FB3-490 (FiberTite-XT FB only)	-495.0
C-231.	Structural concrete	None	N/A	FB5-CR20	-495.0

BACK TO TOP
LINK TO TOP OF ATTACHMENT REQUIREMENTS
©NEMO. All rights reserved.

TABLE 14B: LIGHTWEIGHT CONCRETE DECKS - NEW CONSTRUCTION, REROOF (TEAR-OFF) SYSTEM TYPE A-2: BONDED VAPOR BARRIER, BONDED INSULATION(S), BONDED ROOF COVER*							
System No.	Deck (4.1.2)	Vapor Barrier (3.1.4)	Lightweight Concrete (3.1.2)	Insulation Layer(s)		Roof Cover (3.1.4)	MDP* (psf)
				Type	Attach (3.1.3)		
FIBERTITE, FIBERTITE-XT, FIBERTITE-SM OR FIBERTITE-XTREME APPLICATIONS:							
LWC-7.	Structural concrete primed with ELASTOCOL 500	FTR SBS Poly 3.7, torch-applied	Min. 370 psi, min. 2-inch thick Celcore lightweight concrete with 1-inch thick, 1.0 pcf EPS holey board and surfacing of Celcore PVA Curing Compound	Min. 0.25-inch SECUROCK Gypsum-Fiber Roof Board	FTR-601 ECO or OB500	BB1-190E, BB2-190E, BB3-ATBA, BB4-ATBA	-392.5
LWC-8.	Structural concrete primed with ELASTOCOL 500	FTR SBS Poly 3.7, torch-applied	Min. 370 psi, min. 2-inch thick Celcore lightweight concrete with 1-inch thick, 1.0 pcf EPS holey board and surfacing of Celcore PVA Curing Compound	Min. 0.5-inch SECUROCK Cement Roof Board or min. 7/16-inch DEXcell Cement Roof Board	FTR-601 ECO	BB1-190E, BB2-190E, BB3-ATBA, BB4-ATBA	-392.5
FIBERTITE-FB APPLICATIONS:							
LWC-9.	Structural concrete primed with ELASTOCOL 500	FTR SBS Poly 3.7, torch-applied	Min. 370 psi, min. 2-inch thick Celcore lightweight concrete with 1-inch thick, 1.0 pcf EPS holey board and surfacing of Celcore PVA Curing Compound	Min. 0.25-inch SECUROCK Gypsum-Fiber Roof Board	FTR-601 ECO or OB500	FB1-290, FB2-390, FB3-490, FB4-HA, FB5-CR20 or FB6-601PG	-392.5
LWC-10.	Structural concrete primed with ELASTOCOL 500	FTR SBS Poly 3.7, torch-applied	Min. 370 psi, min. 2-inch thick Celcore lightweight concrete with 1-inch thick, 1.0 pcf EPS holey board and surfacing of Celcore PVA Curing Compound	Min. 0.5-inch SECUROCK Cement Roof Board or min. 7/16-inch DEXcell Cement Roof Board	FTR-601 ECO	FB1-290, FB2-390, FB3-490, FB4-HA, FB5-CR20 or FB6-601PG	-392.5

TABLE 14C: LIGHTWEIGHT CONCRETE DECKS - NEW CONSTRUCTION OR REROOF (TEAR-OFF) SYSTEM TYPE F: NON-INSULATED, BONDED ROOF COVER*							
System No.	Deck (4.1.2)	Vapor Barrier (3.1.4)	Lightweight Concrete (3.1.2)			Roof Cover (3.1.4)	MDP (psf)*
			Deck Treatment	LWC	Surface Treatment		
CELCORE:							
LWC-11.	Min. 22 ga., type BV, Grade 33 steel; 6 ft spans	None	None	Min. 200 psi, min. 2-inch thick Celcore Cellular Concrete	Celcore PVA Curing Compound	FB1-290, FB2-390 or FB3-490	-45.0
LWC-12.	Min. 22 ga., type BV, Grade 33 steel; 5 ft spans	None	None	Min. 300 psi, min. 2-inch thick Celcore Cellular Concrete	Celcore PVA Curing Compound	FB1-290, FB2-390 or FB3-490	-67.5
LWC-13.	Structural concrete primed with ELASTOCOL 500	FTR SBS Poly 3.7, torch-applied	None	Min. 370 psi, min. 2-inch thick Celcore lightweight concrete with 1-inch thick, 1.0 pcf EPS holey board.	Celcore PVA Curing Compound	FB1-290, FB2-390, FB3-490 or FB5-CR20	-97.5
LWC-14.	Min. 22 ga., type B, Grade 40 steel; 6 ft spans	None	Celcore S-1 Deck Preparation Slurry	Min. 390 psi, Min. 2-inch thick, Celcore MF Cellular Concrete with Celcore HS Rheology Modifying Admixture	Celcore PVA Curing Compound	FB1-290, FB2-390, FB3-490 or FB5-CR20	-127.5
LWC-15.	Structural concrete	(Optional) BP1-HA or BP4-TA	None	Min. 390 psi, Min. 2-inch thick, Celcore MF Cellular Concrete with Celcore HS Rheology Modifying Admixture	Celcore PVA Curing Compound	FB1-290, FB2-390, FB3-490 or FB5-CR20	-172.5

BACK TO TOP
LINK TO TOP OF ATTACHMENT REQUIREMENTS
©NEMO. All rights reserved.

TABLE 13D: STRUCTURAL CONCRETE DECKS - NEW CONSTRUCTION, REROOF (TEAR-OFF) OR RECOVER SYSTEM TYPE D-1: INSULATED, MECHANICALLY ATTACHED ROOF COVER							
System No.	Deck (4.1.2)	Insulation (3.1.2)		Roof Cover (3.1.4)			MDP (psf)
		Type	Attach	Membrane	Fastener (3.1.1, 4.2.2)	Attachment	
C-216.	Structural concrete	Min. 1.5-inch thick, one or more layers, any combination	Prelim. attached	FiberTite, XT, SM or Xtreme	FiberTite Magnum Fastener or OMG CD-10 with FTR Magnum2S Plate	Open: 6 x 72-inch	-67.5
C-217.	Structural concrete	Min. 1.5-inch thick, one or more layers, any combination	Prelim. attached	FiberTite, XT, SM or Xtreme	FiberTite Magnum Fastener or OMG CD-10 with FiberTite Magnum Stress Plate or FiberTite Magnum-Plus Stress Plate	Open: 12 x 24-inch	-82.5
C-218.	Structural concrete	Min. 1.5-inch thick, one or more layers, any combination	Prelim. attached	FiberTite, XT, SM or Xtreme	FiberTite Magnum Fastener or OMG #14 with FiberTite Magnum Stress Plate or FiberTite Magnum-Plus Stress Plate	Open: 6 x 51-inch	-112.5
CLOSED STYLE:							
C-219.	Structural concrete	Min. 1.5-inch thick, one or more layers, any combination	Prelim. attached	FiberTite, XT, SM or Xtreme	FiberTite Magnum Fastener or OMG CD-10 with FTR Magnum2S Plate	Closed: 6 x 95-inch	-45.0
C-220.	Structural concrete	Min. 1.5-inch thick, one or more layers, any combination	Prelim. attached	FiberTite, XT, SM or Xtreme	FiberTite Magnum Fastener or OMG CD-10 with FTR Magnum2S Plate	Closed: 6 x 144-inch	-52.5
C-221.	Structural concrete	Min. 1.5-inch thick, one or more layers, any combination	Prelim. attached	FiberTite, XT, SM or Xtreme	FiberTite Magnum Fastener or OMG CD-10 with FiberTite Magnum Stress Plate or FiberTite Magnum-Plus Stress Plate	Closed: 6 x 94-inch	-82.5
C-222.	Structural concrete	Min. 1.5-inch thick, one or more layers, any combination	Prelim. attached	FiberTite, XT, SM or Xtreme	FiberTite Magnum Fastener or OMG CD-10 with FiberTite Magnum Stress Plate or FiberTite Magnum-Plus Stress Plate	Closed: 6 x 104.5-inch	-90.0
C-223.	Structural concrete	Min. 1.5-inch thick, one or more layers, any combination	Prelim. attached	FiberTite, XT, SM or Xtreme	FiberTite Magnum Fastener or OMG CD-10 with FiberTite Magnum Stress Plate or FiberTite Magnum-Plus Stress Plate	Closed: 6 x 47-inch	-112.5

TABLE 13E: STRUCTURAL CONCRETE DECKS - NEW CONSTRUCTION OR REROOF (TEAR-OFF) SYSTEM TYPE F: NON-INSULATED, BONDED MULTI-PLY ROOF COVER*					
System No.	Deck (4.1.2)	Roof Cover (3.1.4)			MDP (psf)*
		Base Ply	Ply	Cap Ply	
C-224.	Structural concrete	None	N/A	FB6-601PG	-112.5
C-225.	Structural concrete primed; ASTM D41	BP1-HA, BP2-FTRSBSA, BP3-CEFA or BP4-TA	(Optional) BP1-HA, BP2-FTRSBSA, BP3-CEFA or BP4-TA	FB4-HA, FB5-CR20, FB6-601PG or FB7-CEFA	-167.5
C-226.	Structural concrete	None	None	FB2-390	-237.5
C-227.	Structural concrete primed; ASTM D41	SOPREMA “Elastophene SP 2.2” or “Elastophene SP 3.0”, torch-applied	None	FB2-390	-320.0
C-228.	Structural concrete sealed; PVA	None	N/A	FB1-290	-377.0
C-229.	Structural concrete	None	N/A	FB3-490	-442.5
C-230.	Structural concrete	None	N/A	FB3-490 (FiberTite-XT FB only)	-495.0
C-231.	Structural concrete	None	N/A	FB5-CR20	-495.0

BACK TO TOP
LINK TO TOP OF ATTACHMENT REQUIREMENTS
©NEMO. All rights reserved.

TABLE 14B: LIGHTWEIGHT CONCRETE DECKS - NEW CONSTRUCTION, REROOF (TEAR-OFF) SYSTEM TYPE A-2: BONDED VAPOR BARRIER, BONDED INSULATION(S), BONDED ROOF COVER*							
System No.	Deck (4.1.2)	Vapor Barrier (3.1.4)	Lightweight Concrete (3.1.2)	Insulation Layer(s)		Roof Cover (3.1.4)	MDP* (psf)
				Type	Attach (3.1.3)		
FIBERTITE, FIBERTITE-XT, FIBERTITE-SM OR FIBERTITE-XTREME APPLICATIONS:							
LWC-7.	Structural concrete primed with ELASTOCOL 500	FTR SBS Poly 3.7, torch-applied	Min. 370 psi, min. 2-inch thick Celcore lightweight concrete with 1-inch thick, 1.0 pcf EPS holey board and surfacing of Celcore PVA Curing Compound	Min. 0.25-inch SECUROCK Gypsum-Fiber Roof Board	FTR-601 ECO or OB500	BB1-190E, BB2-190E, BB3-ATBA, BB4-ATBA	-392.5
LWC-8.	Structural concrete primed with ELASTOCOL 500	FTR SBS Poly 3.7, torch-applied	Min. 370 psi, min. 2-inch thick Celcore lightweight concrete with 1-inch thick, 1.0 pcf EPS holey board and surfacing of Celcore PVA Curing Compound	Min. 0.5-inch SECUROCK Cement Roof Board or min. 7/16-inch DEXcell Cement Roof Board	FTR-601 ECO	BB1-190E, BB2-190E, BB3-ATBA, BB4-ATBA	-392.5
FIBERTITE-FB APPLICATIONS:							
LWC-9.	Structural concrete primed with ELASTOCOL 500	FTR SBS Poly 3.7, torch-applied	Min. 370 psi, min. 2-inch thick Celcore lightweight concrete with 1-inch thick, 1.0 pcf EPS holey board and surfacing of Celcore PVA Curing Compound	Min. 0.25-inch SECUROCK Gypsum-Fiber Roof Board	FTR-601 ECO or OB500	FB1-290, FB2-390, FB3-490, FB4-HA, FB5-CR20 or FB6-601PG	-392.5
LWC-10.	Structural concrete primed with ELASTOCOL 500	FTR SBS Poly 3.7, torch-applied	Min. 370 psi, min. 2-inch thick Celcore lightweight concrete with 1-inch thick, 1.0 pcf EPS holey board and surfacing of Celcore PVA Curing Compound	Min. 0.5-inch SECUROCK Cement Roof Board or min. 7/16-inch DEXcell Cement Roof Board	FTR-601 ECO	FB1-290, FB2-390, FB3-490, FB4-HA, FB5-CR20 or FB6-601PG	-392.5

TABLE 14C: LIGHTWEIGHT CONCRETE DECKS - NEW CONSTRUCTION OR REROOF (TEAR-OFF) SYSTEM TYPE F: NON-INSULATED, BONDED ROOF COVER*							
System No.	Deck (4.1.2)	Vapor Barrier (3.1.4)	Lightweight Concrete (3.1.2)			Roof Cover (3.1.4)	MDP (psf)*
			Deck Treatment	LWC	Surface Treatment		
CELCORE:							
LWC-11.	Min. 22 ga., type BV, Grade 33 steel; 6 ft spans	None	None	Min. 200 psi, min. 2-inch thick Celcore Cellular Concrete	Celcore PVA Curing Compound	FB1-290, FB2-390 or FB3-490	-45.0
LWC-12.	Min. 22 ga., type BV, Grade 33 steel; 5 ft spans	None	None	Min. 300 psi, min. 2-inch thick Celcore Cellular Concrete	Celcore PVA Curing Compound	FB1-290, FB2-390 or FB3-490	-67.5
LWC-13.	Structural concrete primed with ELASTOCOL 500	FTR SBS Poly 3.7, torch-applied	None	Min. 370 psi, min. 2-inch thick Celcore lightweight concrete with 1-inch thick, 1.0 pcf EPS holey board.	Celcore PVA Curing Compound	FB1-290, FB2-390, FB3-490 or FB5-CR20	-97.5
LWC-14.	Min. 22 ga., type B, Grade 40 steel; 6 ft spans	None	Celcore S-1 Deck Preparation Slurry	Min. 390 psi, Min. 2-inch thick, Celcore MF Cellular Concrete with Celcore HS Rheology Modifying Admixture	Celcore PVA Curing Compound	FB1-290, FB2-390, FB3-490 or FB5-CR20	-127.5
LWC-15.	Structural concrete	(Optional) BP1-HA or BP4-TA	None	Min. 390 psi, Min. 2-inch thick, Celcore MF Cellular Concrete with Celcore HS Rheology Modifying Admixture	Celcore PVA Curing Compound	FB1-290, FB2-390, FB3-490 or FB5-CR20	-172.5

BACK TO TOP
LINK TO TOP OF ATTACHMENT REQUIREMENTS
©NEMO. All rights reserved.

MIAMI-DADE COUNTY
PRODUCT CONTROL SECTION
11805 SW 26 Street, Room 208
Miami, Florida 33175-2474
T (786)315-2590 F (786) 31525-99
www.miamidade.gov/economy

DEPARTMENT OF REGULATORY AND ECONOMIC RESOURCES (RER)
BOARD AND CODE ADMINISTRATION DIVISION

NOTICE OF ACCEPTANCE (NOA)

Celcore Incorporated
3148 US HWY 70 Street
Black Mountain, NC 28711

SCOPE:

This NOA is being issued under the applicable rules and regulations governing the use of construction materials. The documentation submitted has been reviewed and accepted by Miami-Dade County RER - Product Control Section to be used in Miami Dade County and other areas where allowed by the Authority Having Jurisdiction (AHJ).

This NOA shall not be valid after the expiration date stated below. The Miami-Dade County Product Control Section (In Miami Dade County) and/or the AHJ (in areas other than Miami Dade County) reserve the right to have this product or material tested for quality assurance purposes. If this product or material fails to perform in the accepted manner, the manufacturer will incur the expense of such testing and the AHJ may immediately revoke, modify, or suspend the use of such product or material within their jurisdiction. RER reserves the right to revoke this acceptance if it is determined by Miami-Dade County Product Control Section that this product or material fails to meet the requirements of the applicable building code.

This product is approved as described herein and has been designed to comply with the Florida Building Code including the High Velocity Hurricane Zone of the Florida Building Code.

DESCRIPTION: Celcore Lightweight Insulating Concrete.

LABELING: Each unit shall bear a permanent label with the manufacturer's name or logo, city, state and following statement: "Miami-Dade County Product Control Approved", unless otherwise noted herein.

RENEWAL of this NOA shall be considered after a renewal application has been filed and there has been no change in the applicable building code negatively affecting the performance of this product.

TERMINATION of this NOA will occur after the expiration date or if there has been a revision or change in the materials, use, and/or manufacture of the product or process. Misuse of this NOA as an endorsement of any product, for sales, advertising or any other purposes shall automatically terminate this NOA. Failure to comply with any section of this NOA shall be cause for termination and removal of NOA.

ADVERTISEMENT: The NOA number preceded by the words Miami-Dade County, Florida, and followed by the expiration date may be displayed in advertising literature. If any portion of the NOA is displayed, then it shall be done in its entirety.

INSPECTION: A copy of this entire NOA shall be provided to the user by the manufacturer or its distributors and shall be available for inspection at the job site at the request of the Building Official.

This NOA renews and revises NOA No. 23-0718.06 and consists of pages 1 through 12.
The submitted documentation was reviewed by Jorge L. Acebo.

10/17/24

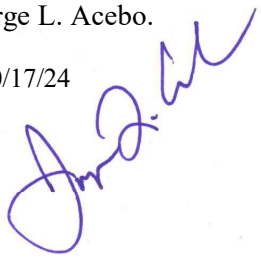

MIAMI-DADE COUNTY APPROVED

ROOFING COMPONENT APPROVAL

Category:	Roofing
Sub-Category:	Lightweight Insulating Concrete
Materials:	Cellular
Maximum Design Pressure:	-465.0 psf.

TRADE NAMES OF PRODUCTS MANUFACTURED OR LABELED BY APPLICANT:

Product	Dimensions	Test Specifications	Product Description
Celcore MF Concentrate	Various	Proprietary ASTM C869	Foaming agents used in making preformed foam for use in lightweight insulating cellular concrete.

MANUFACTURING LOCATIONS:

1. Black Mountain, NC

TRADE NAMES OF PRODUCTS MANUFACTURED BY OTHERS:

Product	Dimensions	Test Specifications	Product Description	Manufacturer
Expanded Polystyrene (EPS Holey Board)	Min. 1" x 2' x 4' 1.0 pcf density (nominal)	ASTM C578 Type I	Expanded polystyrene with a minimum of 8 2¼" keying holes (approx. 3.7% of surface area) to provide monolithic bonding of topping to board slurry.	Generic (with current NOA)
Portland Cement	Various	ASTM C150	Portland Cement.	Generic
CR Assembled Base Sheet Fastener (1.7")	1.75" Standard	TAS 114	Steel base sheet fastener for lightweight insulating concrete with integral plate.	OMG, Inc.
OlyLok Locking Impact Nail	1.8" Standard	TAS 114	Steel base sheet fastener for lightweight insulating concrete with integral plate.	OMG, Inc.
Polymer Batten Strip	¾"-1" wide; 250' coils	TAS 117	Polymer fastening strip designed with 0.2" diameter holes spaced 3" o.c. for use with #14 and #15 fasteners.	OMG, Inc.
OMG 3 in. Galvalume Steel Plate	3" Round	TAS 114	Round galvalume steel stress plate for use with OMG fasteners.	OMG, Inc.

TRADE NAMES OF PRODUCTS MANUFACTURED BY OTHERS: (CONTINUED)

Product	Dimensions	Test Specifications	Product Description	Manufacturer
#15 Roofgrip Large Head	Various	TAS 114	Phillips head, modified buttress thread, drill point, carbon steel fastener for use in steel, wood or concrete decks.	OMG, Inc.
Trufast FM-90 Base Sheet Fastener	1.7" Standard	TAS 114	Steel base sheet fastener for lightweight insulating concrete with 2.7" integral plate.	Altenloh, Brinck & Co. U.S., Inc.
Trufast Twin Loc-Nail Assembled Fastener	1.8” Standard	TAS 114	Steel base sheet fastener for lightweight insulating concrete with integral plate.	Altenloh, Brinck & Co. U.S., Inc.
Trufast VERSA-FAST Fastener and Metal Plate	2.25” Standard	TAS 114	Steel fastener/plate with various steel fastener/plate orientation option.	Altenloh, Brinck & Co. U.S., Inc.
Trufast Twin Loc Coiled Batten Bar	1.8” Standard	TAS 114	Steel fastener and coil steel batten bar for lightweight insulating concrete.	Altenloh, Brinck & Co. U.S., Inc.
Drill-Tec Base Sheet Fastener E (1.7 in.)	1.75" Standard	TAS 114	Steel base sheet fastener for lightweight insulating concrete with integral plate.	GAF
SOPREMA 1.7 in. Base Sheet Fastener	1.7” Standard	TAS 114	Steel base sheet fastener for lightweight insulating concrete with integral plate.	SOPREMA, Inc.
Tremco FM-90 Base Sheet Fastener	1.7” Standard	TAS 114	Steel base sheet fastener for lightweight insulating concrete with 2.7” integral plate.	Tremco, Inc.

EVIDENCE SUBMITTED:

Test Agency	Test Identifier	Test Name/Report	Date
UL LLC	R11599	ANSI/UL 263	06/27/19
FM Approvals	1Z5A6.AM	4454	10/25/96
	2B8A4.AM	4454	07/02/97
	3002416	4454	02/07/02
	3025185	4454	05/22/07
Certified Testing Laboratories	CTLA 105R-C	TAS 114-J / FM 4454	09/24/08
	CTLA 114R-2	TAS 114-J / FM 4454	09/17/09
	CTLA 107R	TAS 114-J / FM 4454	09/23/08
	CTLA 107R-A	TAS 114-J / FM 4454	09/23/08
	CTLA 116R-3	TAS 114-J / FM 4454	11/16/09
Trinity | ERD	SC6775.10.15-07-1-R1	TAS 114-D / FM 4474	10/02/15
	CEL-SC12910.11.16	TAS 114-D / FM 4470-B	11/02/16
NEMO|etc.	TRM-SC13940.01.18-1B	TAS 114-J / FM 4474-D	01/12/18
	4-AB-18-001.05.18	TAS 117 (A) & (B)	05/08/18
	4v-CEL-SSCMT-001.A.R2	ASTM C869	09/09/24
PRI Construction Materials	CELC-004-02-01	TAS 114-J / FM 4470	05/04/15

Deck Type 2I: Steel / Concrete

Deck Description: 18-22 ga. steel
26 ga. Steel
2500-psi structural concrete or concrete plank

System A: Cellular

Cast Density Range: Minimum 36 PCF

Dry Density Range: Minimum 26 PCF

28 Day Compressive Strength Range: 175 - 350 psi

Minimum Characteristic Resistance Force with Approved Fasteners:	2-4 Days:	46 lbf.
	15 Days:	77 lbf.
	21 Days:	112 lbf.
	28 Days:	141 lbf.

Components:

Portland Cement ASTM C150	7- 94 lb. sacks; see table below
Foaming Agent ASTM C869:	(40:1 Water/Concentrate) 3.5 lbs./ft³ preformed foam
Water (max chloride level 250 ppm):	5 gal./sack (see range below)

Wet densities and dry densities using the following range of proportioned ingredients:

Table 1

PSI Range	Wet Density Range	Dry Density Range	Foam	Cement Range	Mixing Water Range	Min. Thickness
160-249	30-40 pcf	22-34.5 pcf	19.70-17.70 ($^{ft.}/_{yd.}$) ³	663-730 lbs.	267-350 lbs.	2"
250-350	36-50 pcf	30-40 pcf	17.70-15.60 ($^{ft.}/_{yd.}$) ³	730-870 lbs.	350-432 lbs.	2"

Application: Materials shall be mixed in a horizontal paddle drum mixer and pumped to the roof at the indicated density, and in compliance with manufacturer specifications. Cast densities shall be checked and recorded as it comes out of the hose, at a minimum interval of one-hour.
Alternately, the slurry coat and insulation panels shall be allowed to cure overnight prior to the application of the top coat. For steel deck applications the slurry coat and insulation boards shall be left undisturbed to cure overnight before the application of the top coat. See Maximum Design Pressure listing herein.

Polystyrene Insulation (EPS Holey Board)

Minimum Nominal Density:	1.0 pcf ASTM C578, Type I
Minimum Dimensions:	1" x 24" x 48"
Holes for keying:	8 - 2¼" holes per 2' x 4' board (approx. 3.7% of surface area) minimum required to provide monolithic bonding of topping board to slurry. (With current NOA).

Polystyrene insulation panels (EPS holey boards) shall be placed in a minimum $^{1}/_{8}$" slurry-coat of insulating concrete, while the material is still in a plastic state. The slurry layer shall be sufficient to fill the structural deck profile with voids. The polystyrene insulation panels shall be placed in a manner causing the boards underside to have full contact with the plastic concrete.

Insulation panels and slurry coat shall be left to cure overnight undisturbed before the installation of the top coat.

The following day a 2" minimum top coat shall be poured and screeded to a smooth finish surface free of ridges and at the proper thickness and slope prior to the installation of the roofing membrane.

After setting of the top coat to support foot traffic, Celcore PVA Curing compound shall be applied at a minimum rate of 300 ft^2 per gallon (7.2m^2/l).

SUBSTRATE REQUIREMENTS:

Note: Refer to Maximum Design Pressures Section of this Notice of Acceptance for specific substrate or substrate treatment requirements.

New Construction:

Concrete:	Structurally designed in compliance with applicable Building Code.
Vapor Retarder:	BUR or Modified Bitumen applied to the structural deck. (With current NOA)
Steel Deck:	Minimum 18-26 gage galvanized G-90 attached to supports in compliance with applicable Building Code. (See Table 2 herein for maximum design pressures, minimum gauge thicknesses and attachments)

Existing Construction:

Concrete:	Broom cleaned and free of any materials or covering that may impede bonding. Substrate shall be in compliance with applicable Building Code.
Gravel Surfaced BUR:	Loose gravel shall be removed, and adhesion of existing roof system shall be tested in compliance with TAS 124 to meet the design pressure requirements determined in compliance with applicable Building Code.
Smooth Surface BUR:	Adhesion of existing roof system shall be tested in compliance with TAS 124 to meet the design pressure requirements determined in compliance with applicable Building Code.

Existing Construction: (Continued)

Smooth Surface

Modified Bitumen: Adhesion of existing roof system shall be tested in compliance with TAS 124 to meet the design pressure requirements determined in compliance with applicable Building Code.

Granule Surface Cap: Adhesion of existing roof system shall be tested in compliance with TAS 124 to meet the design pressure requirements determined in compliance with applicable Building Code.

Table 2: Maximum Design Pressure Applications

NEW CONSTRUCTION				
Substrate	**Substrate Treatment**	**Min. Compressive Strength**	**EPS Holey Board**	**Maximum Design Pressure**
Concrete	None	200 psi	min. 1.0" thick min. 1.0 pcf	-262.5 psf
Concrete	None	350 psi	min. 1.0” thick min. 1.0 pcf	-367.5 psf
Concrete	Smooth Surface Modified Bitumen Vapor Retarder	340 psi	min. 1.0” thick min. 1.0 pcf	-410 psf
Minimum 20 ga. Vented steel deck attached with ITW driller screws thru nickel plated washers to steel supports spaced maximum 5’ on center	OMG Polymer Batten Strips are placed atop the insulating concrete deck parallel spaced 18” and secured to the steel deck using #15 Roofgrip fasteners spaced 12” on center	330 psi	min. 1.0” thick min. 1.0” pcf	-135 psf
Minimum 22 ga. vented steel deck attached with ITW driller screws thru nickel plated washers to steel supports spaced maximum 5’ on center	OMG Polymer Batten Strips are placed atop the insulating concrete deck parallel spaced 18” and secured to the steel deck using #15 Roofgrip fasteners spaced 12” on center	330 psi	min. 1.0” thick min. 1.0” pcf	-97.5 psf

GENERAL LIMITATIONS:

1. Any excess water on the lightweight concrete shall be removed prior to roof installation.
2. Applicator shall maintain a job log and make it available to the Building Official upon request. The job log shall contain cast densities recordings taken at a minimum interval of one-hour.
    a. Cast densities shall be measured with calibrated scale accurate from 1 to 50 lbs. The scale shall display weight in increments of ¼ lb. and be accurately calibrated to $^{1}/_{16}$ lb.
    b. The measuring bucket shall be of 5 quarts or larger
3. Lightweight insulating concrete installation shall demonstrate its suitability to perform as a satisfactory substrate during "walkability inspection". If the deck or a portion of the deck is determined to be out of compliance, the Building Official may call for further testing (if applicable for the roof system) to confirm fastener spacing or provide data for the roof system manufacturer to calculate a new fastener pattern. Fastener testing (if applicable for the roof system) shall be required. Any areas where fasteners will not hold a minimum 40 lbf after 5 days of cure shall be removed and recast.
4. Fastener spacing for mechanical attachment of anchor/base sheet or membrane attachment is based on a minimum fastener resistance value as calculated in conjunction with the maximum design value listed within specific roof membrane manufacturer's NOA. Should the fastener resistance be less than that required, as determined by the Building Official, a revised fastener spacing, prepared, signed and sealed by a Florida registered Professional Engineer, Registered Architect, or Registered Roof Consultant may be submitted. Said revised fastener spacing shall utilize the withdrawal resistance value taken from Testing Application Standards TAS 105 and calculations in compliance with Roofing Application Standard RAS 117. If continued noncompliance is observed and the roof deck and associated roof system cannot be corrected based on additional testing and attachment calculations, the Building Official may call for the removal of all or portions of the deck.
5. Roofing contractor shall consult with roofing system manufacturer for compatibility with all surface coatings or treatments listed in this NOA.
6. Direct-adhered single ply systems shall be installed in strict compliance with membrane manufacturer's specifications and roof assembly manufacturer NOA.
7. Maximum Design Pressures noted in this NOA shall be used in conjunction with the maximum design pressures published in the Roof Assembly Product Control Notice of Acceptance for Approved Systems over lightweight concrete decks.
8. All coatings or surface preparation materials applied to the lightweight insulating concrete shall be listed as an approved interface material with the roof assembly manufacturer.
9. A slurry coat lightweight insulating concrete shall be applied with insulation boards immediately adhered in the minimum $^{1}/_{8}$" slurry coat. Slurry coat and insulation boards shall be left undisturbed to cure overnight before the application of the top coat. If installation is interrupted due to inclement weather or other situations beyond the control of the contractor, the installed insulation board shall be inspected to confirm adhesion to the substrate. Over solid substrates, topping installation shall not be delayed over 24 hours.
10. All products listed herein shall have a quality assurance audit in accordance with the Florida Building Code and Rule 61G20-3 of the Florida Administrative Code.

END OF THIS ACCEPTANCE

DEPARTMENT OF REGULATORY AND ECONOMIC RESOURCES (RER)
BOARD AND CODE ADMINISTRATION DIVISION

MIAMI-DADE COUNTY
PRODUCT CONTROL SECTION
11805 SW 26 Street, Room 208
Miami, Florida 33175-2474
T (786) 315-2590 F (786) 315-2599
www.miamidade.gov/economy

NOTICE OF ACCEPTANCE (NOA)

Metal Era, Inc.
1600 Airport Road
Waukesha, WI 53188

SCOPE:

This NOA is being issued under the applicable rules and regulations governing the use of construction materials. The documentation submitted has been reviewed and accepted by Miami-Dade County RER - Product Control Section to be used in Miami Dade County and other areas where allowed by the Authority Having Jurisdiction (AHJ).

This NOA shall not be valid after the expiration date stated below. The Miami-Dade County Product Control Section (In Miami Dade County) and/or the AHJ (in areas other than Miami Dade County) reserve the right to have this product or material tested for quality assurance purposes. If this product or material fails to perform in the accepted manner, the manufacturer will incur the expense of such testing and the AHJ may immediately revoke, modify, or suspend the use of such product or material within their jurisdiction. RER reserves the right to revoke this acceptance, if it is determined by Miami-Dade County Product Control Section that this product or material fails to meet the requirements of the applicable building code.
This product is approved as described herein, and has been designed to comply with the Florida Building Code including the High Velocity Hurricane Zone of the Florida Building Code.

DESCRIPTION: **Metal-Era® Roof Edge Termination Systems**

LABELING: Each unit shall bear a permanent label with the manufacturer's name or logo, city, state and following statement: "Miami-Dade County Product Control Approved", unless otherwise noted herein.

RENEWAL of this NOA shall be considered after a renewal application has been filed and there has been no change in the applicable building code negatively affecting the performance of this product.

TERMINATION of this NOA will occur after the expiration date or if there has been a revision or change in the materials, use, and/or manufacture of the product or process. Misuse of this NOA as an endorsement of any product, for sales, advertising or any other purposes shall automatically terminate this NOA. Failure to comply with any section of this NOA shall be cause for termination and removal of NOA.

ADVERTISEMENT: The NOA number preceded by the words Miami-Dade County, Florida, and followed by the expiration date may be displayed in advertising literature. If any portion of the NOA is displayed, then it shall be done in its entirety.

INSPECTION: A copy of this entire NOA shall be provided to the user by the manufacturer or its distributors and shall be available for inspection at the job site at the request of the Building Official.

This NOA renews NOA # 21-0511.09 and consists of pages 1 through 53.
The submitted documentation was reviewed by Alex Tigera.



ROOFING COMPONENT APPROVAL

Category: Roofing
Sub-Category: Roofing Fasteners
Materials Steel

SCOPE:

This approves roofing components "**Metal-Era® Roof Edge Termination Systems**" as manufactured by Metal-Era, Inc. and as described in this Notice of Acceptance. Designed to comply with the Florida Building Code and the High Velocity Hurricane Zone of the Florida Building Code for the locations where the pressure requirements, as determined by applicable building code do not exceed the design pressure values listed herein.

TRADE NAMES OF PRODUCTS MANUFACTURED OR LABELED BY APPLICANT:

Table 1

Product Name	Dimensions	Test Specification	Product Description
Anchor-Tite Standard and Modified Version	Max. 8.5" Outside Face Max. Length 12' Min. Thickness 24ga. or 0.040" aluminum	TAS 111 (B)	Decorative galvanized steel fascia or Aluminum with continuous extruded aluminum bar.
Anchor-Tite Long Face Standard and Modified Version	Max. 13" Outside Face Max. Length 12' Min. Thickness 0.050"	TAS 111 (B)	Decorative aluminum fascia with continuous extruded aluminum bar.
Perma-Tite Coping	Coping: Max. 12" Outside Face Max. 4" Inside Face Max. Width 32" Wall Min. Thickness. 24ga. Anchor Clip: Max. Width. 12" Max. Length 12' Min. Thickness 20ga.	TAS 111 (C)	Decorative aluminum coping cap with galvanized steel anchor/support cleats.
Perma-Tite Gold Coping	Coping: Max. 12" Outside Face Max. 4" Inside Face Max. Width 32" Wall Max. Length 12' Min Thickness. 24ga. or 0.040" aluminum Anchor Clip: Max. Width. 12" Max. Length 12' Min. Thickness 16ga.	TAS 111 (C)	Decorative aluminum coping cap with galvanized steel anchor/support cleats.

TRADE NAMES OF PRODUCTS MANUFACTURED OR LABELED BY APPLICANT:

Table 1

Product Name	Dimensions	Test Specification	Product Description
Metal-Era One Edge	Edge Metal: Max. Length 12' Max. Thickness 24ga. Formed Rail Cleat: Max. Length 12' Max. Thickness 20ga. Spring Clip: Max. Length 6' Max. Thickness 26ga.	TAS 111 (B)	Decorative galvanized steel fascia with continuous formed rail.
Anchor-Tite Standard Fascia-Single Ply Version	Max. 8.5" Outside Face Max. Length 12' Min. Thickness 24ga.,or 0.040" aluminum	TAS 111 (B)	Decorative galvanized steel or aluminum fascia with continuous extruded aluminum bar.
Anchor-Tite Standard Fascia-B.U.R./Modified Version	Max. 8.5" Outside Face Max. Length 12' Min. Thickness 24ga.,or 0.040" aluminum	TAS 111 (B)	Decorative galvanized steel or aluminum fascia with continuous extruded aluminum bar.
Anchor-Tite Extended Fascia-Single Ply Version	Max. 13" Outside Face Max. Length 12' Min. Thickness 0.050" aluminum	TAS 111 (B)	Decorative galvanized steel or aluminum fascia with continuous extruded aluminum bar.
Anchor-Tite Extended Fascia-B.U.R./Modified Version	Max. 13" Outside Face Max. Length 12' Min. Thickness 24 ga. or 0.040" aluminum	TAS 111 (B)	Decorative galvanized steel or aluminum fascia with continuous extruded aluminum bar.
Anchor-Tite Extended Canted Fascia	Max. 8.5" Outside Face Max. Length 12' Min. Thickness 24 ga. or 0.040" aluminum	TAS 111 (B)	Decorative galvanized steel or aluminum fascia with continuous extruded aluminum bar.
Anchor-Tite Drip Edge	Max. 7.5" Outside Face Max. Length 12' Min. 0.040" aluminum	TAS 111 (B)	Decorative galvanized steel or aluminum fascia with extruded aluminum bar.
Anchor-Tite HG Fascia-Single Ply Version	Max. 10" Outside Face Max. Length 12' Min. Thickness 22ga or 0.050" aluminum	TAS 111 (B)	Decorative aluminum fascia with continuous extruded aluminum bar.

TRADE NAMES OF PRODUCTS MANUFACTURED OR LABELED BY APPLICANT:

Table 1

Product Name	Dimensions	Test Specification	Product Description
Anchor-Tite HG Fascia-B.U.R./Modified Version	Max. 10" Outside Face Max. Length 12' Min. Thickness 22ga or 0.050" aluminum	TAS 111 (B)	Decorative aluminum fascia with continuous extruded aluminum bar.
Anchor-Tite HG Fascia-Single Ply Version with Eliminailer-T	Max. 10" Outside Face Max. Length 12' Min. Thickness 22ga., or 0.050" aluminum	TAS 111 (B)	Decorative aluminum fascia with continuous extruded aluminum bar.
Anchor-Tite HG Fascia-B.U.R./Modified Version with Eliminailer-T	Max. 10" Outside Face Max. Length 12' Min. Thickness 22ga., or 0.050" aluminum	TAS 111 (B)	Decorative aluminum fascia with continuous extruded aluminum bar.
One Edge (Modified)	Max. 8" Outside Face Max. Length 12' Min. Thickness 24ga.,or 0.040" aluminum	TAS 111 (B)	Decorative galvanized steel or aluminum fascia with continuous formed rail.
One Flash-Through Drip Edge	Max. 6" Front Face Max 4" Top flange Max. Length 12' Min. Thickness 24ga.,or 0.040" aluminum	TAS 111 (B)	Decorative galvanized steel or aluminum fascia with continuous formed rail.
One Drip Edge	Max. 10" Front Face Max. Length 12' Max 4" Top Flange Min. Thickness 24ga.,or 0.040" aluminum	TAS 111 (B)	Decorative galvanized steel or aluminum fascia with continuous formed rail.
One Edge (Single Ply)	Max. 8" Outside Face Max. Length 12' Min. Thickness 24ga.,or 0.040" aluminum	TAS 111 (B)	Decorative galvanized steel or aluminum fascia with continuous formed rail.
One Edge Extended Fascia	Max. 12.5" Outside Face Max. Length 12' Min. Thickness 0.050" aluminum	TAS 111 (B)	Decorative galvanized steel or aluminum fascia with continuous formed rail.

TRADE NAMES OF PRODUCTS MANUFACTURED OR LABELED BY APPLICANT:

Table 1

Product Name	Dimensions	Test Specification	Product Description
One Gravel Stop	Max. 10" Outside Face Max. Length 12' Max 4" Top Flange Min. Thickness 24ga.,or 0.040" aluminum	TAS 111 (B)	Decorative galvanized steel or aluminum fascia with continuous formed rail.
Perma-Tite System 200 Fascia, Single Ply, Crimp-On	Max. 12.5" Outside Face Max. Length 12' Min. Thickness 24ga.,or 0.040" aluminum	TAS 111 (B)	Decorative galvanized steel or aluminum fascia with continuous formed galvanized waterdam.
Perma-Tite System 200 Fascia, Single Ply, Snap-On	Max. 12.75" Face Height Max. Length 12' Min. Thickness 24ga., or 0.040" aluminum	TAS 111 (B)	Decorative galvanized steel or aluminum fascia with formed galvanized waterdam.
Perma-Tite System 300 Fascia, Modified, Snap-On	Max. 12.75" Face Height Max. Length 12' Min. Thickness 24ga.,or 0.040" aluminum	TAS 111 (B)	Decorative galvanized steel or aluminum fascia with continuous formed galvanized waterdam.
VersiTrim Fascia System	Max. 7" Face Height Max. Length 12' Min. Thickness 24ga.,or 0.040" aluminum	TAS 111 (B)	Decorative galvanized steel or aluminum fascia with continuous formed aluminum rail.
Perma-Tite Flush Face Coping	Max. 12" Outside Face Max. Length 12' Max. Wall width 32"Inside Face 4" Min. Thickness 24ga. or 0.040" aluminum	TAS 111 (C)	Decorative aluminum or galvanized coping cap with galvanized steel anchor/support cleats.
Perma-Tite Continuous Cleat Coping	Max. 12" Outside Face Max. Length 12' Max. Wall width 32" Inside Face 4" Min. Thickness 24ga., or 0.040" aluminum	TAS 111 (C)	Decorative aluminum or galvanized coping cap with galvanized steel anchor/support cleats.

TRADE NAMES OF PRODUCTS MANUFACTURED OR LABELED BY APPLICANT:

Table 1

Product Name	Dimensions	Test Specification	Product Description
Perma-Tite Continuous 16 ga Cleat Coping (Tapered, Flat and Existing Slope)	Max. 6" Outside Face Max. Length 12' Max. Wall width 32" Max. 4" Inside Face Min. Thickness 0.050" aluminum	TAS 111 (C)	Decorative aluminum coping cap with galvanized steel anchor/support cleats.
Perma-Tite Single Cantilever Gold Coping	Max. 10" Outside Face Max. Length 12' Max. Wall width 24" Max. 4" Inside Face Min. Thickness 24ga. or 0.040" aluminum	TAS 111 (C)	Decorative aluminum or galvanized coping cap with galvanized steel anchor/support cleats.
Eliminailer-T	Metal Deck or Masonry Wall: Max. 3" Face Height Max. 5.5" Flange Length Max. Length 12' Min. Thickness. 0.100" aluminum Wood Nailer: Max. 3" Face Height Max. 2.5" Flange Length Max. Length 12' Min. Thickness. 0.080" aluminum	FM 4435	A heavy gauge aluminum nailer replacement or enhancement for wood nailers having a 9/32 x 3/8" predrilled slotted holes spaced 6" o.c.
DP One Edge Fascia (Galv Cleat)	Maximum length 10'. Maximum face leg 10"	TAS 111 (B)	Two-part assembly with rigid formed retainer and a decorative snap-on fascia cover.
DP One Edge Fascia (Al Cleat)	Maximum length 10' Maximum face leg 8.25"	TAS 111 (B)	Two-part assembly with rigid formed retainer and a decorative snap-on fascia cover.
Edgebox RI	Maximum Length 10' Maximum face leg 4.5" Maximum cap width 5.5"	TAS 111 (B)	An engineered metal replacement system for roof nailers.
Extender	Maximum Length 10' Maximum face leg 8"	TAS 111 (B)	System used to extend the coverage of continuous water-tight metal systems. Secured with a continuous cleat.

TRADE NAMES OF PRODUCTS MANUFACTURED OR LABELED BY APPLICANT:

Table 1

Product Name	Dimensions	Test Specification	Product Description
Extender with Offset	Maximum Length 10' Maximum face leg 8"	TAS 111 (B)	System used to extend the coverage of continuous water-tight metal systems. Secured with a continuous cleat.
Seal-Tite WR Box Gutter	Maximum length 10' Maximum face leg 7-3/4"	TAS 111 (B)	Gutters fabricated from either aluminum or prefinished steel.
Seal-Tite WR Offset Gutter	Maximum length 10' Maximum face leg 7-3/4"	TAS 111 (B)	Gutters fabricated from either aluminum or prefinished steel.
Seal-Tite WR Chamfer Gutter	Maximum length 10' Maximum face leg 7-3/4"	TAS 111 (B)	Gutters fabricated from either aluminum or prefinished steel.

Metal Era fabricates the products listed in Table 1 herein under licensing agreements for the following roof membrane manufactures: Carlisle Syntec, a division of Carlisle Construction Materials, Inc., Firestone Building Products Company, LLC, Johns-Manville Corp., Seaman Corp., Versico, a division of Carlisle Construction Materials Inc., Sika Sarnafil, A Division of Sika Corp., Siplast, Inc., Malarkey Roofing Products Co., Flex Membrane International, Corp., SOPREMA, Inc., Petersen Aluminum Corp., Derbigum Americas, Inc., and Tremco, Inc.

EVIDENCE SUBMITTED:

Test Agency	Test Identifier	Test Name/Report	Date
Intertek ETL Semko	3032125	TAS 111(B)	10/31/02
		TAS 111(C)	10/31/02
	3033767	TAS 111 (B)	10/31/02
	3033767 Addendum	TAS 111 (B)	10/02/03
Farabaugh Engineering and Testing, Inc.	T295-16	TAS 111 (C)	11/02/16
	T294-16	TAS 111 (C)	11/02/16
	T291-16	TAS 111 (B)	11/02/16
Factory Mutual Research Corp.	3052487	FM 4435	08/17/16
	PR449542	FM 4435	10/02/18
	3062924	FM 4435	04/17/19

MANUFACTURING LOCATION

1. Waukesha, WI.

INSTALLATION:

Perma-Tite Coping (14"):

Perma-Tite Anchor clips shall be spaced a maximum of three feet o.c. Anchor clips shall be fastened with #10 x 1-$^{1}/_{2}$" hex head screws fastened through the third hole of the top portion of the anchor clip the side where the stainless-steel spring clip is located (see detail "A" herein). And with two additional 1-¼" annular ring shank nail fastened in the provided holes on the opposite face at a maximum of 3" up from the bottom lip (see detail "A" herein).
Maximum Design Pressure: -168.5 psf. (vertical)

Perma-Tite Coping (16"):

Perma-Tite Anchor clips shall be spaced a maximum of three feet O.C. Anchor clips shall be fastened with #10-12 s 1-1/2" long S.S. hex head screws with ½" washer. One fastener located in third full hole from bend on both sides of 12" wide anchor clip on inside face and outside face of coping. In addition, one fastener #14-12 x 1-1/2" long flat head screw located in hole closest to center of wood blocking on both sides of 12" anchor clip on inside wall of coping and one fastener #14-12 x 1-1/2" long flat head screw in fifth hold from bottom of drip edge on both sides of 12" wide anchor clip (see detail "B" herein).
Maximum Design Pressure: -301.7 psf. (horizontal); -261.5 psf. (vertical)

Perma-Tite Gold Coping:

Perma-Tite Anchor clips shall be spaced a maximum of three feet O.C. Anchor clips shall be fastened with #10-12 s 1-1/2" long S.S. hex head screws with ½" washer. One fastener located in third full hole from bend on both sides of 12" wide anchor clip on inside face and outside face of coping. In addition, one fastener #14-12 x 1-1/2" long flat head screw located in hole closest to center of wood blocking on both sides of 12" anchor clip on inside wall of coping and one fastener #14-12 x 1-1/2" long flat head screw in fifth hold from bottom of drip edge on both sides of 12" wide anchor clip (see detail "C" herein).
Maximum Design Pressure: -368.3 psf. (horizontal); -242.8 psf. (vertical)

Metal-Era One Edge

The top portion of the anchor bar shall be fastened with a minimum #10-12 x 2" S.S. hex head screw with ½" S.S. washer @ 12" on center secured to the top nailer (see detail "D" herein).
Maximum Design Pressure: -141.5 psf. (horizontal)

Anchor-Tite Standard Fascia-Single Ply Version	TAS 111 (B)	Decorative galvanized steel or aluminum fascia with continuous extruded aluminum bar.
Anchor-Tite Standard Fascia-B.U.R./Modified Version	TAS 111 (B)	Decorative galvanized steel or aluminum fascia with continuous extruded aluminum bar.

Anchor-Tite Standard Fascia-Single Ply Version or B.U.R./Modified Version

- For Face Height less than or equal to 5.5 in (140 mm): The anchor bar is secured to the wood nailer with #10-2.0 in (51 mm) long or #14 stainless steel screws (wood substrates only) or masonry screws (wood or masonry substrates) with washer secured on the vertical face with the fasteners spaced 12 in (305 mm) o.c. approximately 1.25 in (32 mm) down from top of anchor bar.
- For Face Heights less than or equal to 8.5 in (216 mm) The anchor bar is secured to the wood nailer with #10-2.0 in (51 mm) long or #14 stainless steel screws (wood substrates only) or masonry screws (wood or masonry substrates) secured on the vertical face in one row only. The top row of fasteners is spaced 12 in (305 mm) o.c. approximately 1.25 in (32 mm) from the top of the anchor bar.
- For Face Heights greater than 5.5 in (140 mm) and less than or equal to 8.5 in (216 mm) The anchor bar is secured to the wood nailer with #10-2.0 in (51 mm) long or #14 stainless steel screws (wood substrates only) or masonry screws (wood or masonry substrates) secured on the vertical face in two rows. The top row of fasteners is spaced 12 in (305 mm) o.c. approximately 1.25 in (32 mm) from the top of the anchor bar. The bottom row of fasteners is spaced 24 in (610 mm) o.c. approximately 2.75 in (70 mm) from top of the anchor bar. The rows are staggered
- Fascia cover is installed over the anchor bar.

Material	Max Face Height (in.)	Perimeter Pressure (psf.)		Corner Pressure (psf.)	
		Horizontal	Vertical	Horizontal	Vertical
0.040in. Alum [Fascia Cover]	5.5	262	454	272	570
0.040in. Alum [Fascia Cover]	8.5 [fastening only (1) row]	146	252	145	304
0.040in. Alum [Fascia Cover]	5.5 [fastening (2) rows]	175	302	163	342
0.040in. Alum [Fascia Cover]	8.5 fastening (2) rows]	175	302	163	342
24ga. Steel [Fascia Cover]	5.5	262	454	272	570
24ga. Steel [Fascia Cover]	8.5 [fastening only (1) row]	146	252	145	304
24ga. Steel [Fascia Cover]	5.5 [fastening (2) rows]	175	302	163	342
24ga. Steel [Fascia Cover]	8.5 [fastening (2) rows]	175	302	163	342

Anchor-Tite Extended Fascia-Single Ply Version	TAS 111 (B)	Decorative galvanized steel or aluminum fascia with continuous extruded aluminum bar.
Anchor-Tite Extended Fascia-B.U.R./Modified Version	TAS 111 (B)	Decorative galvanized steel or aluminum fascia with continuous extruded aluminum bar.

Anchor-Tite Extended Fascia-Single Ply Version or B.U.R./Modified Version

- The anchor bar is secured to the wood nailer with #10-2.0 in (51 mm) long or #14 stainless steel screws (wood substrates only) or masonry screws (wood or masonry substrates) secured on the vertical face with the fasteners spaced maximum 12 in (305 mm) o.c. approximately 1.25 in (32 mm) down from the top anchor bar.
- The cleat is secured to the wood nailer with #14 stainless steel screws (wood substrates only) or masonry screws (wood or masonry substrates) secured on the vertical face with the fasteners spaced maximum 24 in (610 mm) o.c. approximately 2.125 (54 mm) o.c. up from the bottom of the cleat
- Fascia cover is applied over the anchor bar.

Material	Max Face Height (in.)	Perimeter Pressure (psf.)		Corner Pressure (psf.)	
		Horizontal	Vertical	Horizontal	Vertical
0.050in. Alum [Fascia Cover]	13	175	302	163	342
0.063in. Alum [Fascia Cover]	13	175	303	163	342
20ga. Steel [Cleat]	13	175	303	163	342

Anchor-Tite Extended Canted Fascia	TAS 111 (B)	Decorative galvanized steel or aluminum fascia with continuous extruded aluminum bar.

Anchor-Tite Extended Canted Fascia

- The waterdam is secured to wood nailers with 1.25 in (32 mm) long ring shank roofing nails spaced maximum 6 in (152 mm) o.c. 0.5 in (13 mm) from edge of roof flange or secured to the Eliminailer T using 4 in. (102 mm) wide 24 ga clips 72 in (1829 mm) o.c.
- The anchor bar is secured to the wood nailer with #10-2.0 in (51 mm) long or #14 stainless steel screws (wood substrates only) or masonry screws (wood or masonry substrates), or Tek 3 x 1 in (76 x 25 mm) long (Eliminailer T) secured on the vertical face with the fasteners spaced 12 in (305 mm) o.c. approximately 1.25 in (32 mm) from the top anchor bar.
- The cleat is secured to the wood nailer with 1/4 x1 1/4 masonry/wood screws secured on the vertical face with the fasteners spaced maximum 24 in (610 mm) o.c. approximately 2.0 (51 mm) o.c. up from the bottom of the cleat
- Fascia cover is snapped into place.

Material	Max Face Height (in.)	Perimeter Pressure (psf.)		Corner Pressure (psf.)	
		Horizontal	Vertical	Horizontal	Vertical
0.040in. Alum [Fascia Cover]	5.5	175	302	163	342
0.050in. Alum [Fascia Cover]	8.5	291	504	289	607
0.050in. Alum [Fascia Cover]	10	204	353	199	417
0.050in. Alum [Fascia Cover]	13.5	131	227	127	266
0.063in. Alum [Fascia Cover]	8.5	291	504	289	607
0.063in. Alum [Fascia Cover]	10	204	353	199	417
0.063in. Alum [Fascia Cover]	13.5	131	227	127	266
20ga. Steel [Cleat]	13.5	131	227	127	266
22ga. Steel [Fascia Cover]	7.5	175	302	163	342
22ga. Steel [Fascia Cover]	10	175	302	163	342
24ga. Steel [Fascia Cover]	8.5	175	302	163	342
24ga. Steel [Waterdam]	13.5	131	227	127	266

Anchor-Tite Drip Edge	TAS 111 (B)	Decorative galvanized steel or aluminum fascia with continuous formed rail.

Anchor-Tite Drip Edge

- The anchor bar is secured to the wood nailer with #10-1.5 in (38 mm) long or #14 stainless steel screws (wood substrates only) or masonry screws (wood or masonry substrates) secured on the vertical face in two rows. The top row of fasteners is spaced 12 in (305 mm) o.c. approximately 1.25 in (32 mm) from the top of the anchor bar. The bottom row of fasteners is spaced 24 in (610 mm) o.c. approximately 2.75 in (70 mm) from top of the anchor bar. The rows are staggered
  • Fascia cover is applied over the anchor bar.

Material	Max Face Height (in.)	Perimeter Pressure (psf.)		Corner Pressure (psf.)	
		Horizontal	Vertical	Horizontal	Vertical
0.040in. Alum [Fascia Cover]	6	568	983	560	1176
24ga. Steel [Fascia Cover]	6	568	983	561	1176

Anchor-Tite Drip Edge	TAS 111 (B)	Decorative galvanized steel or aluminum fascia with continuous formed rail.

Anchor-Tite Drip Edge

- The anchor bar is secured to the wood nailer with #10-2.0 in (51 mm) long or #14 stainless steel screws (wood substrates only) or masonry screws (wood or masonry substrates) secured on the vertical face in two rows. The top row of fasteners is spaced 12 in (305 mm) o.c. approximately 1.25 in (32 mm) from the top of the anchor bar. (Optional) The bottom row of fasteners is spaced 24 in (610 mm) o.c. approximately 2.75 in (70 mm) from top of the anchor bar. The rows are staggered
  • Fascia cover is applied over the anchor bar.

Material	Max Face Height (in.)	Perimeter Pressure (psf.)		Corner Pressure (psf.)		# of Fastening Rows
		Horizontal	Vertical	Horizontal	Vertical	
0.040in. Alum [Fascia Cover]	7.5	87	151	90	190	1
	7.5	247	428	253	531	2

Anchor-Tite HG Fascia-Single Ply Version	TAS 111 (B)	Decorative aluminum fascia with continuous extruded aluminum bar.
Anchor-Tite HG Fascia-B.U.R./Modified Version	TAS 111 (B)	Decorative aluminum fascia with continuous extruded aluminum bar.

Anchor-Tite HG Fascia-Single Ply Version or B.U.R./Modified Version

- The anchor bar is secured to the wood nailer with #10-2.0 in (51 mm) long or #14 stainless steel screws (wood substrates only) or masonry screws (wood or masonry substrates) secured on the vertical face with the fasteners spaced 12 in (305 mm) o.c. approximately 1.25 in (32 mm) from the top anchor bar.
- Fascia cover is applied over the anchor bar.

Material	Max Face Height (in.)	Perimeter Pressure (psf.)		Corner Pressure (psf.)	
		Horizontal	Vertical	Horizontal	Vertical
0.040in. Alum [Fascia Cover]	8.5	175	302	163	342
0.050in. Alum [Fascia Cover]	7	364	630	362	759
0.050in. Alum [Fascia Cover]	8.5	291	504	289	607
0.050in. Alum [Fascia Cover]	10	189	328	181	380
0.063in. Alum [Fascia Cover]	7	364	630	362	759
22ga. Steel [Fascia Cover]	8.5 or 10	175	302	163	342

Anchor-Tite HG Fascia-Single Ply Version with Eliminailer-T	TAS 111 (B)	Decorative aluminum fascia with continuous extruded aluminum bar.
Anchor-Tite HG Fascia-B.U.R./Modified Version with Eliminailer-T	TAS 111 (B)	Decorative aluminum fascia with continuous extruded aluminum bar.

Anchor-Tite HG Fascia-Single Ply Version or B.U.R./Modified Version

- The anchor bar is secured to the wood nailer with #10-2.0 in (51 mm) long or #14 stainless steel screws (wood substrates only) or masonry screws (wood or masonry substrates), or Tek 3 x 1 in (76 x 25 mm) long (Eliminailer T) secured on the vertical face with the fasteners spaced 12 in (305 mm) o.c. approximately 1.25 in (32 mm) from the top anchor bar.
- Fascia cover is applied over the anchor bar.

Material	Max Face Height (in.)	Perimeter Pressure (psf.)		Corner Pressure (psf.)	
		Horizontal	Vertical	Horizontal	Vertical
0.050in. Alum [Fascia Cover]	10	204	353	199	417
22ga. Steel [Fascia Cover]	8.5 or 10	175	302	181	380

Eliminailer-T (Sub-assembly Performance)	TAS 111 (B)	Decorative aluminum fascia with continuous extruded aluminum bar.

Eliminailer-T (Sub-assembly Performance)

- The Eliminailer T is a heavy gauge aluminum nailer replacement or enhancement for wood nailers or masonry walls. When used with a masonry wall, the face height is 1.5 or 3 in. (38 or 76 mm), the flange length is 5.5 in. (140 mm) wide, and the thickness is 0.100 in. (2.5 mm), and it can be secured with a #14 masonry screw or 0.25 in. (6.4 mm) concrete spike. When used with a wood nailer, the face height is 1.5 or 3 in (38.1 or 76.2 mm), the flange length is 2.5 in, (64 mm) wide, and the thickness is 0.080 in (2.0 mm) and secured with a #14 steel screws. Both come with 9/32 x 3/8 in. (7.1 x 15.9 mm) predrilled slotted holes spaced 6 in (152.4 mm) o.c. staggered distances from the face. The Eliminailer T is to be used with FM Approved fascia.
- Anchor-Tite HG Fascia or Anchor-Tite Canted Fascia are attached to the Eliminailer T with Tek 3 x 1 in. (76 x 25 mm) long fasteners secured on the vertical face with the fasteners spaced 12 in. (305 mm) o.c. approximately 1.25 in. (32 mm) from the top of the Eliminailer T face.

Material	**Max Face Height (in.)**	**Perimeter Pressure (psf.)***		**Corner Pressure (psf.)***	
		Horizontal	**Vertical**	**Horizontal**	**Vertical**
0.080in. Alum [Fascia Cover]	1.5	960	1,663	1,193	2,505
0.100in. Alum [Fascia Cover]	3	960	1,663	1,193	2,505
Note:	*Performance herein reflects performance of the Eliminailer-T sub-assembly. Overall system performance to be limited to that of the Anchor-Tite Drip Edge or Anchor-Tite HG Fascia assembly selection, as noted herein.				

One Edge (Modified)	TAS 111 (B)	Decorative galvanized steel or aluminum fascia with continuous formed rail.

One Edge (Modified)

- For Face Height less than or equal to 5 in (127 mm): The rail is secured to the wood nailer with #10-2.0 in (51 mm) long or #14 stainless steel screws (wood substrates only) or masonry screws (wood or masonry substrates) secured on the vertical face with the fasteners spaced maximum 12 in (305 mm) o.c. approximately 1.25 in (32 mm) from the top of the rail.
- For Face Heights less than or equal to 8 in (203 mm) The rail is secured to the wood nailer with two rows of #10-2.0 in (51 mm) long or #14 stainless steel screws (wood substrates only) or masonry screws (wood or masonry substrates). The top row is secured on the vertical face with the fasteners spaced 12 in (305 mm) o.c. approximately 1.25 in (32 mm) from the top of the rail. The bottom row is secured on the vertical face with the fasteners spaced 24 in (610 mm) o.c. approximately 2.75 in (70 mm) from the top of the rail.
- Spring clips are placed over the rail spaced 48 in (1219 mm) o.c.
- Fascia cover is snapped into place.

Material	Max Face Height (in.)	Perimeter Pressure (psf.)		Corner Pressure (psf.)	
		Horizontal	Vertical	Horizontal	Vertical
0.040in. Alum [Fascia Cover]	5	407	706	416	873
0.040in. Alum [Fascia Cover]	8	175	302	163	342
20ga. Steel [Rail]	5	407	706	416	873
20ga. Steel [Rail]	8	175	302	163	342
24ga. Steel [Fascia Cover]	5	407	706	416	873
24ga. Steel [Fascia Cover]	8	175	302	163	342

One Flash-Through Drip Edge	TAS 111 (B)	Decorative galvanized steel or aluminum fascia with continuous formed rail.

One Flash-Through Drip Edge

- The continuous cleat is secured to the wood nailer with 1.25 in (32 mm) long ring shank nails secured on the vertical face spaced maximum 12 in (305 mm) o.c. approximately 0.813 in (21 mm) down from the top of the wall.
- The top flange of the fascia cover is fastened with 1.25 in (32 mm) long ring shank nails in two staggered rows, each row spaced 12 in (305 mm) o.c., the rows are 1.75 in (44 mm) and 3 in (76 mm) from edge of wall.

Material	Max Face Height (in.)	Perimeter Pressure(psf.)		Corner Pressure (psf.)	
		Horizontal	Vertical	Horizontal	Vertical
0.040in. Alum [Fascia Cover]	6	276	479	271	569
22ga. Steel [Cleat]	6	276	479	271	569
24ga. Steel [Fascia Cover]	6	276	479	271	569

One Drip Edge	TAS 111 (B)	Decorative galvanized steel or aluminum fascia with continuous formed rail.

One Drip Edge

- For Face Height less than or equal to 6 in (152 mm): The continuous cleat is secured to the wood nailer with 1.25 in (32 mm) long ring shank nails secured on the vertical face spaced 12 in (305 mm) o.c. approximately 0.813 in (21 mm) down from the top of the wall.
- The top flange of the fascia cover is fastened with 1.25 in (32 mm) long ring shank nails spaced 6 in (152 mm) o.c, 0.5 in (13 mm) edge of flange.
- For Face Height greater than 6 in (152 mm) and less than or equal to 10 in (254 mm): The continuous cleat is secured to the wood nailer with 1.25 in (32 mm) long ring shank nails secured on the vertical face spaced 12 in (305 mm) o.c. approximately 1.5 in (38 mm) up from the drip.
- The top flange of the fascia cover is fastened with 1.25 in (32 mm) long ring shank nails spaced 6 in (152 mm) o.c, 0.4375 in (11 mm) edge of flange.

Material	Max Face Height (in.)	Perimeter Pressure (psf.)		Corner Pressure (psf.)	
		Horizontal	Vertical	Horizontal	Vertical
0.040in. Alum [Fascia Cover]	6	276	479	271	569
0.040in. Alum [Fascia Cover]	10	175	302	163	342
0.050in. Alum [Fascia Cover]	6	276	479	271	569
0.050in. Alum [Fascia Cover]	10	175	302	163	342
0.063in. Alum [Fascia Cover]	6	276	479	271	569
0.063in. Alum [Fascia Cover]	10	175	302	163	342
0.040in. Alum [Fascia Cover – PVC or TPO Coating]	6	276	479	271	569
0.040in. Alum [Fascia Cover – PVC or TPO Coating]	10	175	302	163	342
22ga. Steel [Fascia Cover]	6	276	479	271	569
22ga. Steel [Fascia Cover]	10	175	302	163	342
24ga. Steel [Fascia Cover]	6	276	479	271	569
24ga. Steel [Fascia Cover]	10	175	302	163	342
24ga. Steel [Fascia Cover – PVC or TPO Coating]	6	276	479	271	569
24ga. Steel [Fascia Cover – PVC or TPO Coating]	10	175	302	163	342
22ga. Steel [Cleat]	6	276	479	271	569
22ga. Steel [Cleat]	10	175	302	163	342

One Edge (Single Ply)	TAS 111 (B)	Decorative galvanized steel or aluminum fascia with continuous formed rail.

One Edge (Single Ply)

- The continuous cleat is secured to the wood nailer with #10-2 in (51 mm) long or #14 stainless steel screws (wood substrates only) or masonry screws (wood or masonry substrates) secured 12 in (305 mm) o.c. approximately 13/16 - 1 in (21-25 mm) down from the upper horizontal surface.
- Spring clips are placed over the rail spaced 48 in (1219 mm) o.c.
- Fascia cover is snapped into place.

Material	Max Face Height (in.)	Perimeter Pressure (psf.)		Corner Pressure (psf.)	
		Horizontal	Vertical	Horizontal	Vertical
0.040in. Alum [Fascia Cover]	4	393	680	380	797
0.040in. Alum [Fascia Cover]	8	146	252	145	304
24ga. Steel [Fascia Cover]	4	393	680	380	797
24ga. Steel [Fascia Cover]	8	146	252	145	304
20ga. Steel [Cleat]	4	393	680	380	797
20ga. Steel [Cleat]	8	146	252	145	304

One Edge Extended Fascia	TAS 111 (B)	Decorative galvanized steel or aluminum fascia with continuous formed rail.

One Edge Extended Fascia

- The continuous cleat is secured to the wood nailer in two rows. The top row is #10-2 in (51 mm) long or #14 stainless steel screws (wood substrates only) or masonry screws (wood or masonry substrates) secured 12 in (305 mm) o.c. approximately 1 in (19 mm) down from the upper horizontal surface. The bottom row is 1/4x1 ¼ Long masonry/wood screws spaced 24 in (605 mm) o.c. approximately 2.125 in (54 mm) up from the bottom edge of the cleat.
- Spring clips are placed over the rail spaced 48 in (1219 mm) o.c.
- Fascia cover is snapped into place.

Material	Max Face Height (in.)	Perimeter Pressure (psf.)		Corner Pressure (psf.)	
		Horizontal	Vertical	Horizontal	Vertical
0.050in. Alum [Fascia Cover]	12.5	146	252	145	304
20ga. Steel [Cleat]	12.5	146	252	145	304

One Gravel Stop	TAS 111 (B)	Decorative galvanized steel or aluminum fascia with continuous formed rail.

One Gravel Stop

- For Face Height less than or equal to 6 in (152 mm): The continuous cleat is secured to the wood nailer with 1.25 in (32 mm) long ring shank nails secured on the vertical face spaced 12 in (305 mm) o.c. approximately 13/16 in (21 mm) down from the top of the wall.
- The top flange of the fascia cover is fastened with 1.25 in (32 mm) long ring shank nails spaced 6 in (152 mm) o.c, 0.4375 in (11 mm) edge of flange.
- For Face Height >6 in (152) up to 10 in (254 mm): The continuous cleat is secured to the wood nailer with 1.25 in (32 mm) long ring shank nails secured on the vertical face spaced 12 in (305 mm) o.c. approximately 1.5 in (38 mm) up from bottom of cleat.
- The top flange of the fascia cover is fastened with 1.25 in (32 mm) long ring shank nails spaced 6 in (152 mm) o.c, 0.4375 in (11 mm) edge of flange.

Material	Max Face Height (in.)	Perimeter Pressure (psf.)		Corner Pressure (psf.)	
		Horizontal	Vertical	Horizontal	Vertical
0.040in. Alum [Fascia Cover]	6	204	353	200	417
0.040in. Alum [Fascia Cover]	10	247	428	253	531
0.050in. Alum [Fascia Cover]	6	204	353	200	417
0.050in. Alum [Fascia Cover]	10	247	428	253	531
0.063in. Alum [Fascia Cover]	6	204	353	200	417
0.063in. Alum [Fascia Cover]	10	247	428	253	531
0.040in. Alum [Fascia Cover – PVC or TPO Coating]	6	204	353		417
0.040in. Alum [Fascia Cover – PVC or TPO Coating]	10	247	428	253	531
24ga. Steel [Fascia Cover]	6	204	353	200	417
24ga. Steel [Fascia Cover]	10	247	428	253	531
24ga. Steel [Fascia Cover – PVC or TPO Coating]	6	204	353	200	417
24ga. Steel [Fascia Cover – PVC or TPO Coating]	10	247	428	253	531
22ga. Steel [Cleat]	6	204	353	200	417
22ga. Steel [Cleat]	10	247	428	253	531

Perma-Tite System 200 Fascia, Single Ply, Crimp-On	TAS 111 (B)	Decorative galvanized steel or aluminum fascia with continuous formed rail.

Perma-Tite System 200 Fascia, Single Ply, Crimp-On

- Steel cant/waterdam is secured to wood nailers with 1-¼ in (32 mm) long ring shank roofing nails secured on the vertical face spaced 12 in (305 mm) o.c. 2 ¼ in (57 mm) from bottom of drip edge and on the top 6 in (152) o.c. approximately 0.5 in (13 mm) from the edge.
- An FM Approved single ply roof membrane is applied over the cant.
- The fascia cover is then applied over the cant and crimped with a hand crimper maximum 18 in (457 mm) o.c.

Material	Max Face Height (in.)	Perimeter Pressure (psf.)		Corner Pressure (psf.)	
		Horizontal	Vertical	Horizontal	Vertical
0.040in. Alum [Fascia Cover]	8	116	202	127	266
0.050in. Alum [Fascia Cover]	5	189	328	181	380
0.050in. Alum [Fascia Cover]	12.5	87	152	91	190
0.063in. Alum [Fascia Cover]	5	189	328	181	380
0.063in. Alum [Fascia Cover]	12.5	87	152	91	190
24ga. Steel [Fascia Cover]	8	116	202	127	266
24ga. Steel [Waterdam]	5	189	328	181	380
24ga. Steel [Waterdam]	8	116	202	127	266
24ga. Steel [Waterdam]	12.5	87	152	91	190

Perma-Tite System 200 Fascia, Single Ply, Snap-On	TAS 111 (B)	Decorative galvanized steel or aluminum fascia with continuous formed rail.
Perma-Tite System 300 Fascia, Modified, Snap-On	TAS 111 (B)	Decorative galvanized steel or aluminum fascia with continuous formed rail.

Perma-Tite System 200 Fascia, Single Ply, Snap-On or 300 Fascia, Modified, Snap-On

- Steel cant/waterdam is secured to wood nailers with 1-¼ in (32 mm) long ring shank roofing nails secured on the vertical face spaced 12 in (305 mm) o.c. 2 ¼ in (57 mm) from bottom of drip edge and on the top 6 in (152) o.c. approximately 0.5 in (13 mm) from the edge.
- Stainless steel spring clips are applied maximum 4 ft. (1.2 m) o.c.
- An FM Approved roof membrane is applied over the cant.
- The fascia cover is then snapped into place over the cant.

Material	Max Face Height (in.)	Perimeter Pressure (psf.)		Corner Pressure (psf.)	
		Horizontal	Vertical	Horizontal	Vertical
0.040in. Alum [Fascia Cover]	8.25	189	328	182	380
0.040in. Alum [Fascia Cover]	12.75	116	202	109	228
0.050in. Alum [Fascia Cover]	8.25	204	353	200	417
0.050in. Alum [Fascia Cover]	12.75	116	202	109	228
0.063in. Alum [Fascia Cover]	12.75	116	202	109	228
24ga. Steel [Fascia Cover]	8.25	189	328	182	380
24ga. Steel [Fascia Cover]	12.75	116	202	109	228
24ga. Steel [Waterdam]	8.25	189	328	182	380
24ga. Steel [Waterdam]	12.75	116	202	109	228

VersiTrim Fascia System	TAS 111 (B)	Decorative galvanized steel or aluminum fascia with continuous aluminum formed rail.

VersiTrim Fascia System

- The rail is secured to wood nailers with #10 x 2 in (51 mm) long fasteners secured on the vertical face with one row of fasteners spaced 12 in (305 mm) o.c. approximately 1 in (25 mm) below the top of the bar.
- The fascia cover is applied over the rail.

Material	Max Face Height (in.)	Perimeter Pressure (psf.)		Corner Pressure (psf.)	
		Horizontal	Vertical	Horizontal	Vertical
0.040 Alum [Fascia Cover]	7	233	403	236	493
24ga. Steel [Fascia Cover]	7	233	403	236	493
0.050 Alum [Rail]	7	233	403	236	493

Perma-Tite Coping	TAS 111 (C)	Decorative aluminum coping cap with galvanized steel anchor/support cleats.

Perma-Tite Coping (<u>Min. 20ga. Anchor Clips</u>)

- Anchor clips are secured on the 6 in (152 mm) face with two #10 or #14 stainless steel screws (wood substrates only) or masonry screws (wood or masonry substrates) 1.5 in (38 mm) from the bottom and on the top of the 6 in (152 mm) side with two screws 1.75 in (44 mm) from the edge. On the 4 in (102 mm) side the face is secured with two screws 1.25 in (32 mm) from the bottom and on the top of the 4 in (102 mm) side with two screws 1.125 in (28.6 mm) from the edge.
- Anchor clips are spaced 24 in (610 mm), 36 in (914 mm) or 48 in (1219 mm) o.c.
- The coping cap is snapped into place over the anchor clips.

Material	Max Back Height (in.)	Max Wall Width (in.)	Max Face Height (in.)	Perimeter Pressure (psf.)		Corner Pressure (psf.)	
				Horizontal	Vertical	Horizontal	Vertical
0.040in. Alum or 24ga. Steel [Coping Cap]	4	8	6	161	278	127	266
	Anchor Clip Material and O.C. Spacing: 20 ga, and 4 ft o.c.						
	4	12	6	87	151	73	152
	Anchor Clip Material and O.C. Spacing: 20 ga, and 4 ft o.c.						
	4	10	6	204	353	163	342
	Anchor Clip Material and O.C. Spacing: 16 ga, and 4 ft o.c.						
	4	12	6	116	202	91	190
	Anchor Clip Material and O.C. Spacing: 20 ga, and 3 ft o.c.						
	4	14	6	116	202	91	190
	Anchor Clip Material and O.C. Spacing: 20 ga, and 3 ft o.c.						
	4	16	6	131	227	109	228
	Anchor Clip Material and O.C. Spacing: 16 ga, and 4 ft o.c.						
	4	24	6	73	126	N/A	N/A
	Anchor Clip Material and O.C. Spacing: 16 ga, and 3 ft o.c.						
0.040in. Alum or 24ga. Steel [Coping Cap]	4	16	12	73	126	N/A	N/A
	Anchor Clip Material and O.C. Spacing: 16 ga, and 4 ft o.c.						
0.050in. or 0.063in. Alum [Coping Cap]	4	8	6	218	378	182	380
	Anchor Clip Material and O.C. Spacing: 20 ga, and 4 ft o.c.						
	4	10	6	233	403	182	380
	Anchor Clip Material and O.C. Spacing: 16 ga, and 4 ft o.c.						
	4	12	6	131	227	109	228
	Anchor Clip Material and O.C. Spacing: 20 ga, and 3 ft o.c.						
	4	14	6	116	202	91	190
	Anchor Clip Material and O.C. Spacing: 20 ga, and 3 ft o.c.						
	4	16	6	88	152	73	152
	Anchor Clip Material and O.C. Spacing: 20 ga, and 3 ft o.c.						
	4	24	6	102	177	73	152
	Anchor Clip Material and O.C. Spacing: 16 ga, and 3 ft o.c.						
	4	32	6	88	152	73	152
	Anchor Clip Material and O.C. Spacing: 16 ga, and 2 ft o.c.						
0.050in. or 0.063in. Alum [Coping Cap]	4	16	12	117	202	91	190
	Anchor Clip Material and O.C. Spacing: 16 ga, and 4 ft o.c.						
	4	24	12	102	177	91	190
	Anchor Clip Material and O.C. Spacing: 16 ga, and 3 ft o.c.						

Perma-Tite Coping	TAS 111 (C)	Decorative aluminum coping cap with galvanized steel anchor/support cleats.

Perma-Tite Coping (<u>16 ga. Anchor Clips</u>)

- Anchor clips are secured on the 6 in (152 mm) face with two #10 or #14 stainless steel screws (wood substrates only) or masonry screws (wood or masonry substrates) 1.5 in (38 mm) from the bottom and on the top of the 6 in (152 mm) side with two screws 1.75 in (44 mm) from the edge. On the 4 in (102 mm) side the face is secured with two screws 1.25 in (32 mm) from the bottom and on the top of the 4 in (102 mm) side with two screws 1.125 in (28.6 mm) from the edge.
- Anchor clips are spaced 24 in (610 mm), 36 in (914 mm) or 48 in (1219 mm) o.c.
- The coping cap is snapped into place over the anchor clips.

Material	Max Back Height (in.)	Max Wall Width (in.)	Max Face Height (in.)	Perimeter Pressure (psf.)		Corner Pressure (psf.)	
				Horizontal	Vertical	Horizontal	Vertical
0.040in. Alum or 24ga. Steel [Coping Cap]	4	12	6	146	252	109	228
	Anchor Clip Material and O.C. Spacing: 16 ga, and 4 ft o.c.						
0.050in. or 0.063in. Alum [Coping Cap]	4	12	6	218	378	182	380
	Anchor Clip Material and O.C. Spacing: 16 ga, and 4 ft o.c.						
	4	16	6	146	252	127	266
	Anchor Clip Material and O.C. Spacing: 16 ga, and 4 ft o.c.						

Perma-Tite Flush Face Coping	TAS 111 (C)	Decorative aluminum coping cap with galvanized steel anchor/support cleats.
Perma-Tite Gold Coping	TAS 111 (C)	Decorative aluminum coping cap with galvanized steel anchor/support cleats.

Perma-Tite Flush Face Coping or Perma-Tite Gold Coping (<u>Min. 20 ga. Anchor Clips</u>)

- Anchor clips are secured on the outside face with two #10 or #14 stainless steel screws (wood substrates only) or masonry screws (wood or masonry substrates) 1.5 in (38 mm) from the bottom and on the top of the outside with two screws 1.75 in (44 mm) from the edge. On the inside face are secured with two screws 1.25 in (32 mm) from the bottom and on the top of the inside with two screws 1.125 in (28.6 mm) from the edge.
- Anchor clips are spaced 24 in (610 mm), 36 in (914 mm) or 48 in (1219 mm) o.c. as noted below
- The coping cap is snapped into place over the anchor clips.

Material	Max Back Height (in.)	Max Wall Width (in.)	Max Face Height (in.)	Perimeter Pressure (psf)		Corner Pressure (psf.)	
				Horizontal	Vertical	Horizontal	Vertical
0.040in. Alum or 24ga. Steel [Coping Cap]	4	8	6	146	252	109	228
	Anchor Clip Material and O.C. Spacing: 20 ga, and 4 ft o.c.						
	4	10	6	218	378	182	380
	Anchor Clip Material and O.C. Spacing: 16 ga, and 4 ft o.c.						
	4	12	6	116	202	91	190
	Anchor Clip Material and O.C. Spacing: 20 ga, and 3 ft o.c.						
	4	14	6	87	151	73	152
	Anchor Clip Material and O.C. Spacing: 20 ga, and 3 ft o.c.						
	4	16	6	87	151	N/A	N/A
	Anchor Clip Material and O.C. Spacing: 20 ga, and 3 ft o.c.						
	4	24	6	116	202	91	190
	Anchor Clip Material and O.C. Spacing: 16 ga, and 3 ft o.c.						
0.040in. Alum or 24ga. Steel [Coping Cap]	4	16	12	131	227	109	228
	Anchor Clip Material and O.C. Spacing: 16 ga, and 4 ft o.c.						
	4	24	12	87	151	73	152
	Anchor Clip Material and O.C. Spacing: 16 ga, and 4 ft o.c.						
0.050in. or 0.063in. Alum [Coping Cap]	4	8	6	190	328	163	342
	Anchor Clip Material and O.C. Spacing: 20 ga, and 4 ft o.c.						
	4	10	6	291	504	236	493
	Anchor Clip Material and O.C. Spacing: 16 ga, and 4 ft o.c.						
	4	12	6	146	252	109	228
	Anchor Clip Material and O.C. Spacing: 20 ga, and 3 ft o.c.						
	4	14	6	116	202	91	190
	Anchor Clip Material and O.C. Spacing: 20 ga, and 3 ft o.c.						
	4	16	6	102	176	73	152
	Anchor Clip Material and O.C. Spacing: 20 ga, and 3 ft o.c.						
	4	24	6	131	227	109	228
	Anchor Clip Material and O.C. Spacing: 16 ga, and 3 ft o.c.						
	4	32	6	87	151	73	152
	Anchor Clip Material and O.C. Spacing: 16 ga, and 2 ft o.c.						
0.050in. or 0.063in. Alum [Coping Cap]	4	16	12	146	252	109	228
	Anchor Clip Material and O.C. Spacing: 16 ga, and 4 ft o.c.						
	4	24	12	102	176	91	190
	Anchor Clip Material and O.C. Spacing: 16 ga, and 3 ft o.c.						

Perma-Tite Flush Face Coping	TAS 111 (C)	Decorative aluminum coping cap with galvanized steel anchor/support cleats.
Perma-Tite Gold Coping	TAS 111 (C)	Decorative aluminum coping cap with galvanized steel anchor/support cleats.

Perma-Tite Flush Face Coping or Perma-Tite Gold Coping (<u>16 ga. Anchor Clips</u>)

- Anchor clips are secured on the outside face with two #10 or #14 stainless steel screws (wood substrates only) or masonry screws (wood or masonry substrates) 1.5 in (38 mm) from the bottom and on the top of the outside with two screws 1.75 in (44 mm) from the edge. On the inside face are secured with two screws 1.25 in (32 mm) from the bottom and on the top of the inside with two screws 1.125 in (28.6 mm) from the edge.
- Anchor clips are spaced 24 in (610 mm), 36 in (914 mm) or 48 in (1219 mm) o.c. as noted below
- The coping cap is snapped into place over the anchor clips.

Material	Max Back Height (in.)	Max Wall Width (in.)	Max Face Height (in.)	Perimeter Pressure (psf)		Corner Pressure (psf)	
				Horizontal	Vertical	Horizontal	Vertical
0.040in. Alum or 24ga. Steel [Coping Cap]	4	12	6	189	328	163	342
	Anchor Clip Material and O.C. Spacing: 16 ga, and 4 ft o.c.						
	4	16	6	131	227	109	228
	Anchor Clip Material and O.C. Spacing: 16 ga, and 4 ft o.c.						
0.050in. or 0.063in. Alum [Coping Cap]	4	12	6	233	403	182	380
	Anchor Clip Material and O.C. Spacing: 16 ga, and 4 ft o.c.						
	4	16	6	146	252	109	228
	Anchor Clip Material and O.C. Spacing: 16 ga, and 4 ft o.c.						

Perma-Tite Continuous Cleat Coping	TAS 111 (C)	Decorative aluminum coping cap with galvanized steel anchor/support cleats.

Perma-Tite Continuous Cleat Coping

- The outside cleat is secured to the front face of the substrate with #14 stainless steel screws (wood substrate only) or masonry screw spaced 12 in (305 mm) o.c. and 1.25 in (32 mm) up from the bottom edge of the cleat and is secured to the top face of the substrate with #14 stainless steel screws (wood substrate only) or masonry screw spaced 12 in (305 mm) o.c. and 0.5 in (13 mm) from the edge of the cleat.
- The inside cleat is secured to the inside face of the substrate with #14 stainless steel screws (wood substrates only) or masonry screw spaced 12 in (305 mm) o.c. and 1.75 in (44 mm) up from the bottom edge of the cleat and is secured to the top face of the substrate with #14 stainless steel screws (wood substrates only) or masonry screw spaced 12 in (305 mm) o.c. and 0.5 in (13 mm) from the edge of the cleat.
- The coping cap is secured over the two cleats and crimped on the inside face with a hand crimper maximum 18 in (457 mm) o.c.

Material	Max Back Height (in.)	Max Wall Width (in.)	Max Face Height (in.)	Perimeter Pressure (psf.)		Corner Pressure (psf.)	
				Horizontal	Vertical	Horizontal	Vertical
0.040in. Alum or 24ga. Steel [Coping Cap]	4	12	6	190	328	145	304
	4	14	6	160	277	127	266
	4	16	6	175	304	145	304
	4	24	6	88	152	73	152
0.040in. Alum or 24ga. Steel [Coping Cap]	4	16	12	146	252	109	228
	4	24	12	88	152	73	152
0.050in. or 0.063in. Alum [Coping Cap]	4	12	6	218	378	182	380
	4	14	6	175	304	145	304
	4	16	6	233	404	199	418
	4	24	6	131	227	109	228
	4	32	6	102	176	73	152
0.050in. or 0.063in. Alum [Coping Cap]	4	16	12	218	378	182	380
	4	24	12	131	227	109	228

Perma-Tite Continuous 16 ga Cleat Coping (Tapered, Flat and Existing Slope)	TAS 111 (C)	Decorative aluminum coping cap with galvanized steel anchor/support cleats.

Perma-Tite Continuous 16 ga Cleat Coping (Tapered, Flat and Existing Slope)

- The cleat is secured to the outside face with #14 stainless steel screws (wood substrate only) or masonry screw spaced 6 in (152 mm) o.c. and 1.5 in (38 mm) up from the bottom edge of the cleat and is secured to the top face with #14 stainless steel screws (wood substrate only) or masonry screw spaced 12 in (305 mm) o.c. and 0.5 in (13 mm) from the edge of the cleat.
- The coping cap is fastened on the inside face with #10" or #14 stainless steel screws (wood substrate only) or masonry screw spaced 6 in (152 mm) o.c. 1.5 in (38 mm) up from the bottom of the coping cap.

Material	Max Back Height (in.)	Max Wall Width (in.)	Max Face Height (in.)	Perimeter Pressure (psf.)		Corner Pressure (psf.)	
				Horizontal	Vertical	Horizontal	Vertical
0.050in. Alum or 0.063in. Alum [Coping Cap]	4	32	6	116	202	91	190
	4	32	6	116	202	91	190
16 ga. Steel [Cleats]	4	32	6	116	202	91	190

Perma-Tite Single Cantilever Gold Coping	TAS 111 (C)	Decorative aluminum coping cap with galvanized steel anchor/support cleats.

Perma-Tite Single Cantilever Gold Coping

- For 6 in (152 mm) face and 16 in (406 mm) wide walls: Anchor clips are secured on the inside face with two #10 or #14 stainless steel screws (wood substrate only) or masonry screw 1.75 in (44 mm) from the bottom and on the top of the inside side with two screws 1.5 in (38 mm) from the edge. On the top of the outside face is secured with two #10 or #14 stainless steel screws (wood substrate only) or masonry screw 4.5 in (114 mm) from the edge and another two screws 5 in (127 mm) from the edge
- For 10 in (254 mm) face and 24 in (610 mm) wide walls: Anchor clips are secured on the inside face with two #10 or #14 stainless steel screws (wood substrate only) or masonry screw 1.375 in (35 mm) from the bottom and on the top of the inside side with two screws 2.5 in (63.5 mm) from the edge. The top of the outside face is secured with two #10 or #14 stainless steel screws (wood substrate only) or masonry screw 4.5 in (114 mm) from the edge and another two screws 5 in (127 mm) from the edge
- Anchor clips are spaced 36 in (914 mm) o.c.
- The coping cap is snapped into place over the anchor clips.

Material	Max Back Height (in.)	Max Wall Width (in.)	Max Face Height (in.)	Perimeter Pressure (psf.)		Corner Pressure (psf.)	
				Horizontal	Vertical	Horizontal	Vertical
0.040in. Alum or 24ga. Steel [Coping Cap]	4	16	6	116	202	91	190
0.050in. Alum or 0.063in. Alum [Coping Cap]	4	16	6	116	202	91	190
0.040in. Alum or 24ga. Steel [Coping Cap]	4	24	10	88	152	N/A	N/A
0.050in. Alum or 0.063in. Alum [Coping Cap]	4	24	10	88	152	73	152

DP One Edge Fascia (Galv Cleat)	TAS 111 (B)	Two-part assembly with rigid formed retainer and a decorative snap-on fascia cover.

DP One Edge Fascia (Galv Cleat) - Maximum length 10'. Maximum face width listed below. Minimum 20ga. galvanized steel cleat with snap-on fascia cover. Installed with 1.5" stainless steel hex head screws 12" o.c.

Material	Max Face Height (in.)	Perimeter Pressure(psf)		Corner Pressure (psf)	
		Horizontal	Vertical	Horizontal	Vertical
0.040in. Alum	5.25	320	n/a	325	n/a
0.040in. Alum	6	204	n/a	200	n/a
0.040in. Alum	10	102	n/a	109	n/a
24ga. Steel	5.25	378	n/a	379	n/a
24ga. Steel	6	247	n/a	236	n/a
24ga. Steel	10	131	n/a	127	n/a
0.039in. Zinc	6	189	n/a	182	n/a
0.039in. Zinc	10	131	n/a	127	n/a

DP One Edge Fascia (Al Cleat)	TAS 111 (B)	Two-part assembly with a rigid formed retainer and a decorative snap-on fascia cover.

DP One Edge Fascia (Al Cleat) - Maximum length 10'. Maximum face height listed below. Fascia cover snapped into place over 0.050 aluminum retainers. Installed with 1.5" stainless steel fastener spaced 12" o.c.

Material	Max Face Height (in.)	Perimeter Pressure(psf)		Corner Pressure (psf)	
		Horizontal	Vertical	Horizontal	Vertical
0.040in. Alum	6	218	n/a	218	n/a
0.040in. Alum	6.75	204	n/a	200	n/a
0.040in. Alum	8.25	116	n/a	109	n/a
24ga. Steel	5.25	276	n/a	271	n/a
24ga. Steel	6	218	n/a	218	n/a
24ga. Steel	8.25	160	n/a	163	n/a
0.039in Zinc	6	189	n/a	200	n/a

Edgebox RI	TAS 111 (B)	An engineered metal replacement system for roof nailers.

Edgebox RI- Maximum length 10'. 5.5" face width, 4.5" face leg, 4.5" back leg. Minimum 20ga. galvanized steel two-piece unit. Installed to the bottom with #14 Universal fasteners, spaced at 12" o.c. and top secured with #14 HD fasteners spaced at 48" o.c. and #14 Universal fasteners at 12" o.c. through each side of EdgeBox RI.

Material	Max Back Height (in.)	Max Wall Width (in.)	Max Face Height (in.)	Perimeter Pressure(psf)		Corner Pressure (psf)	
				Horizontal	Vertical	Horizontal	Vertical
20ga. Steel	4.5	5.5	4.5	523	n/a	434	n/a

Extender	TAS 111 (B)	System used to extend the coverage of continuous water-tight metal systems.

Extender – Maximum length 10'. Maximum face height 8.0". 24ga. galvanized steel cleat with fascia cover. Installed 1.5" stainless steel ring shank at 12" o.c.

Material	Max Face Height (in.)	Perimeter Pressure(psf)		Corner Pressure (psf)	
		Horizontal	Vertical	Horizontal	Vertical
0.040in. Alum	8	58	n/a	73	n/a
0.050in. Alum	8	102	n/a	91	n/a
24ga. Steel	8	73	n/a	73	n/a

Extender with Offset	TAS 111 (B)	System used to extend the coverage of continuous water-tight metal systems

Extender with Offset– Maximum length 10'. Maximum face height 8.0". 24ga. galvanized steel cleat with fascia cover. Installed 1.5" stainless steel ring shank at 12" o.c.

Material	Max Face Height (in.)	Perimeter Pressure(psf)		Corner Pressure (psf)	
		Horizontal	Vertical	Horizontal	Vertical
0.040in. Alum	8	58	n/a	73	n/a
0.050in. Alum	8	102	n/a	91	n/a
24ga. Steel	8	73	n/a	73	n/a

Seal-Tite WR Box Gutter	TAS 111 (C)	Gutters fabricated from either aluminum or prefinished steel

Seal-Tite WR Box Gutter– Maximum length 10'. Maximum face width 7 ¾", 6" face leg. 0.050 aluminum or 24ga. galvanized steel gutter and 1" wide two-piece extruded aluminum gutter bracket. Installed 1.5" universal fasteners at 24" o.c.

Material	Max Face Height (in.)	Max Top Width (in.)	Perimeter Pressure(psf)		Corner Pressure (psf)	
			Horizontal	Vertical	Horizontal	Vertical
0.040in. Alum	6	7.75	87	151	109	228
24ga. Steel	6	7.75	87	151	109	228

Seal-Tite WR Offset Gutter	TAS 111 (C)	Gutters fabricated from either aluminum or prefinished steel.

Seal-Tite WR Offset Gutter– Maximum length 10'. Maximum face width 7 ¾", 6" face leg. 0.050 aluminum or 24ga. galvanized steel gutter and 1" wide two-piece extruded aluminum gutter bracket. Installed 1.5" universal fasteners at 24" o.c.

Material	Max Face Height (in.)	Max Top Width (in.)	Perimeter Pressure(psf)		Corner Pressure (psf)	
			Horizontal	Vertical	Horizontal	Vertical
0.040in. Alum	6	7.75	87	151	109	228
24ga. Steel	6	7.75	87	151	109	228

Seal-Tite WR Chamfer Gutter	TAS 111 (C)	Gutters fabricated from either aluminum or prefinished steel

Seal-Tite WR Chamfer Gutter– Maximum length 10'. Maximum face width 7 ¾", 6" face leg. 0.050 aluminum or 24ga. galvanized steel gutter and 1" wide two-piece extruded aluminum gutter bracket. Installed 1.5" universal fasteners at 24" o.c.

Material	Max Face Height (in.)	Max Top Width (in.)	Perimeter Pressure(psf)		Corner Pressure (psf)	
			Horizontal	Vertical	Horizontal	Vertical
0.040in. Alum	6	7.75	87	151	109	228
24ga. Steel	6	7.75	87	151	109	228

LIMITATIONS:

1. All products listed herein shall be installed in accordance with the requirements set forth in RAS 111.
2. Maximum dimensions shall be as outlined in Table 1 herein.
3. All products listed herein shall be installed in conjunction with Metal-Era's required accessories including but not limited to: miters, splice caps, splice plates, corners, end caps, pier caps, etc.
4. Downspout scuppers, spillout scuppers shall be fabricated and installed in accordance with RAS 111.
5. If required, install water cut-off as recommended by the membrane manufacturer and under the anchor bar.
6. Contractor shall check as-built conditions and verify roof edge details for accuracy to fit as built conditions prior to installation. Installer shall comply with Metal-Era's published installation requirements.
7. Fasteners shall be Metal-Era's approved fasteners.
8. Fasteners shall provide a minimum pull out resistance of 240lbf (109 kg) into the substrate being fastened into. When tested in accordance with TAS 105.
9. No exposed fasteners shall be permitted.
10. All fasteners shall be of compatible materials.
11. Finishes shall be natural aluminum mill finish, or pre-coated Kynar 500. All coatings shall be in compliance with the Florida Building Code (FBC).
12. The maximum design pressures listed here in are applicable to the perimeter areas of the roof. Increased design pressures for corner areas, in compliance with applicable building code may be met through rational analysis by increasing the number of attachment points in these areas. The maximum fastener spacing noted in the "Systems Description" section of this approval shall not be exceeded. All rational analysis computations shall be prepared, signed and sealed by a Florida Registered Professional Engineer, Registered Architect, or Registered Roof Consultant.
13. All products listed herein shall have a quality assurance audit in accordance with the Florida Building Code and Rule 61G20-3 of the Florida Administrative Code.
14. All approved products listed herein shall be labeled and shall bear the imprint or identifiable marking of the manufacturer's name or logo and following statement: "Miami-Dade County Product Control Approved" or the Miami-Dade County Product Control Seal as shown below.

DETAIL DRAWINGS

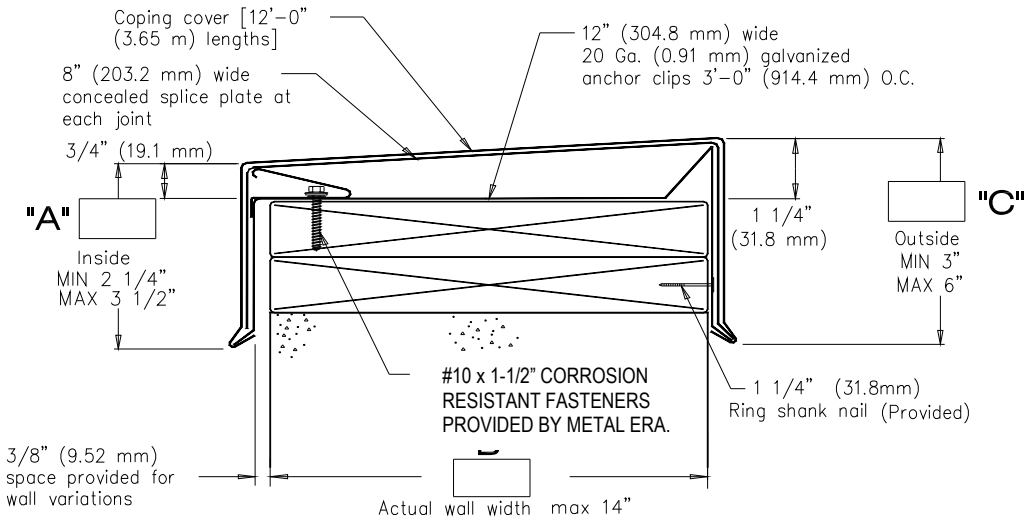

PERMA-TITE COPING (14" WIDE)

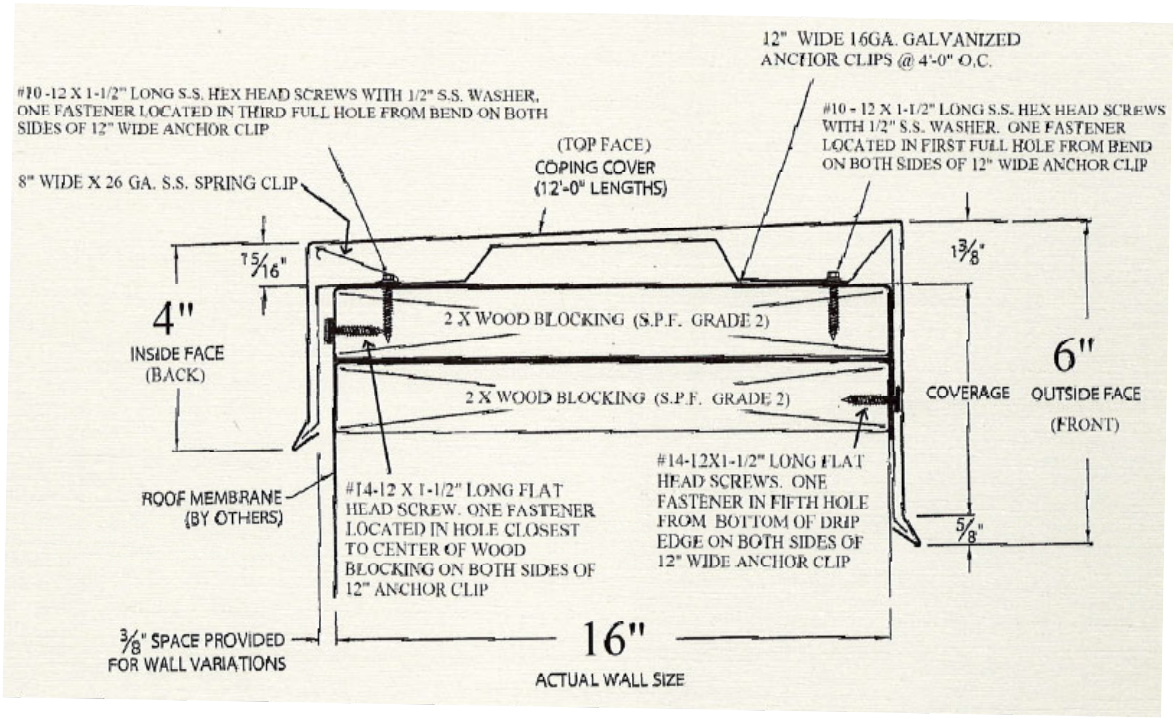

PERMA-TITE COPING (16" WIDE)

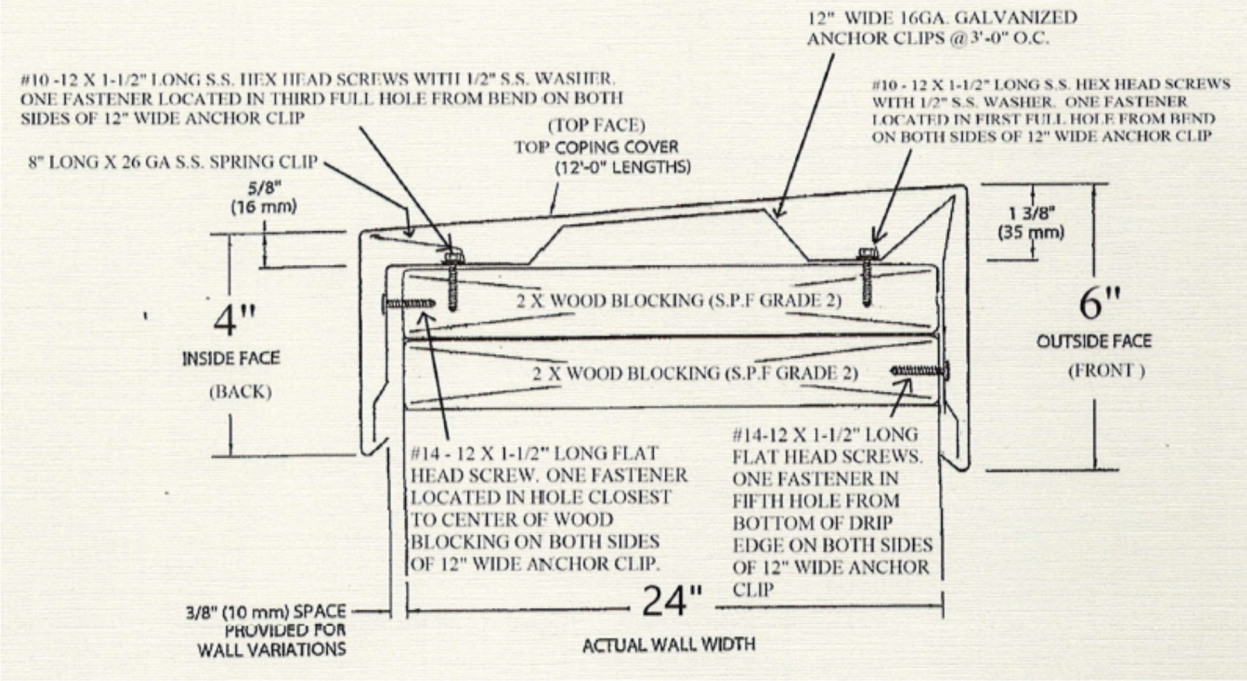

PERMA-TITE GOLD COPING

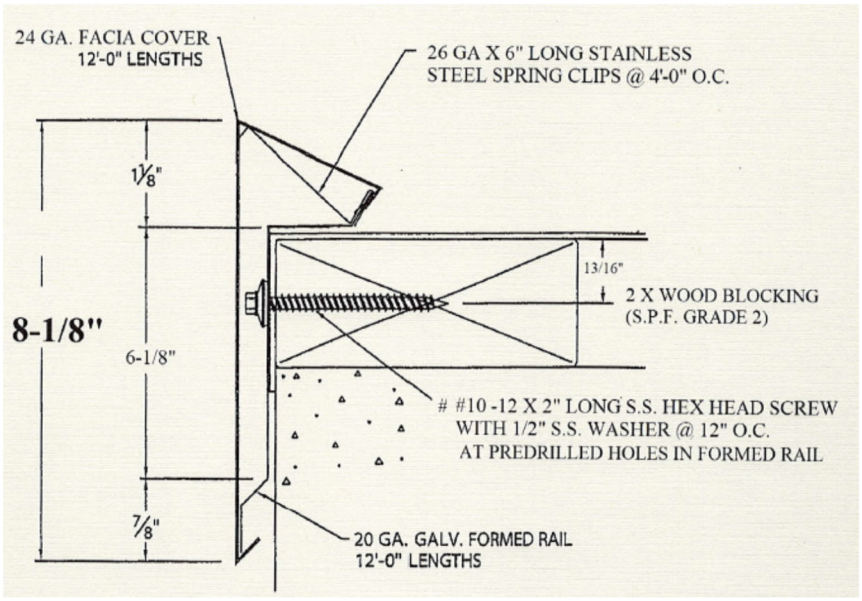

METAL-ERA ONE EDGE

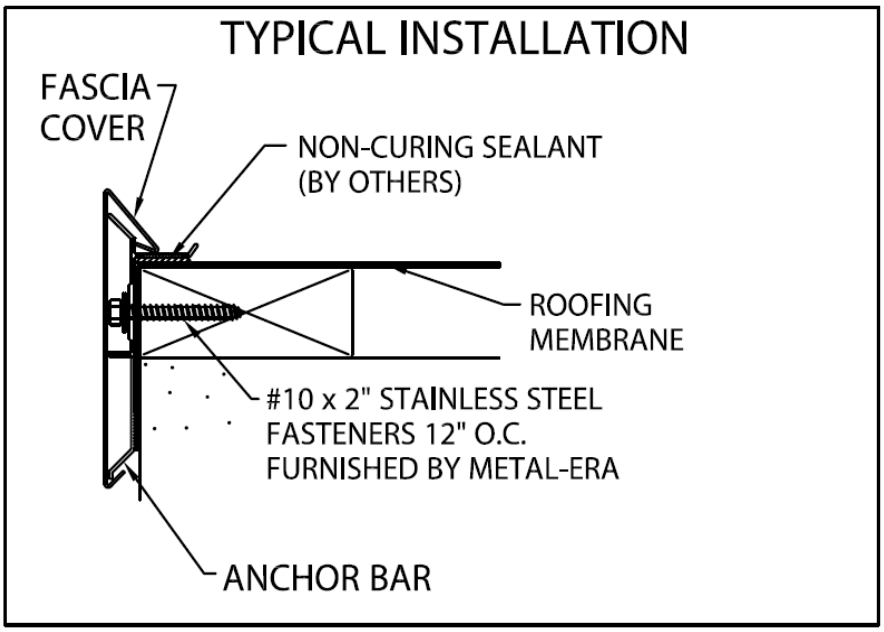

ANCHOR-TITE STANDARD FASCIA-SINGLE PLY VERSION

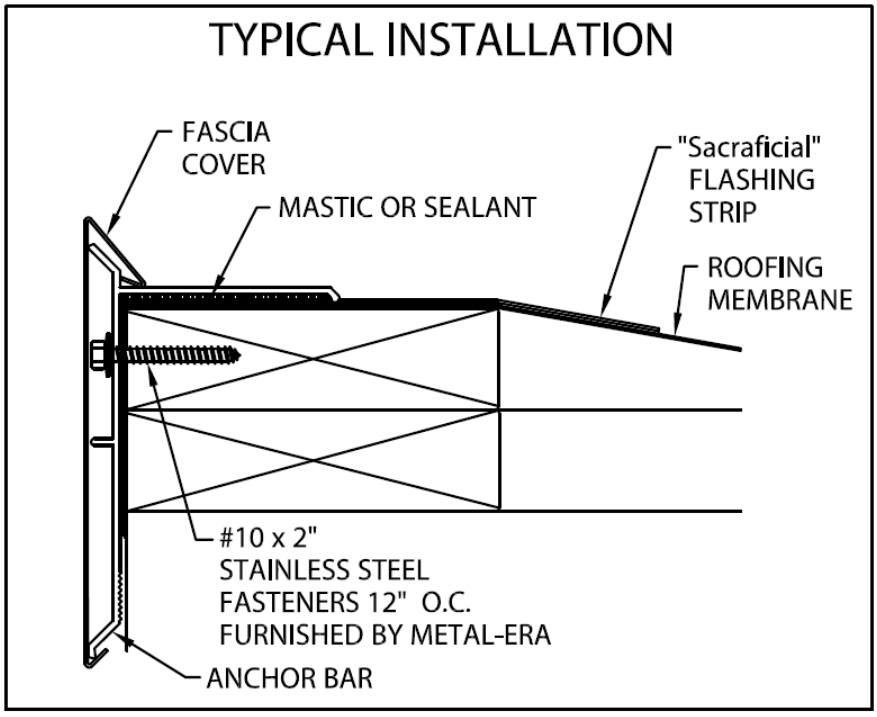

ANCHOR-TITE STANDARD FASCIA-B.U.R./MODIFIED VERSION

SINGLE-PLY APPLICATION
TYPICAL INSTALLATION

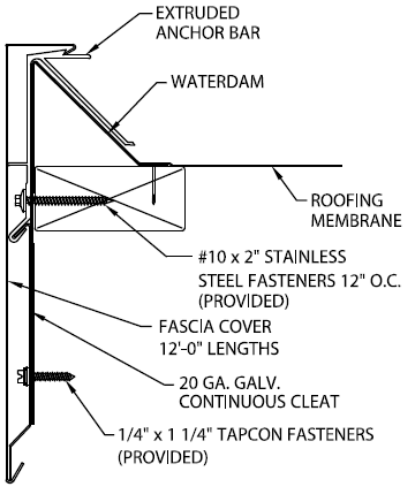

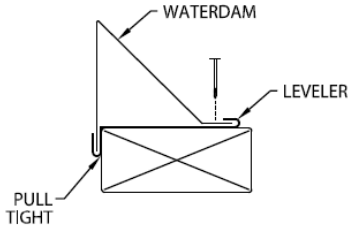

WATERDAM MUST BE PULLED TIGHT TO THE OUTSIDE FACE OF THE BUILDING BEFORE NAILING THE ROOF FLANGE.

ANCHOR-TITE EXTENDED FASCIA-SINGLE PLY VERSION OR ANCHOR-TITE EXTENDED CANTED FASCIA

B.U.R. / MODIFIED APPLICATION
TYPICAL INSTALLATION

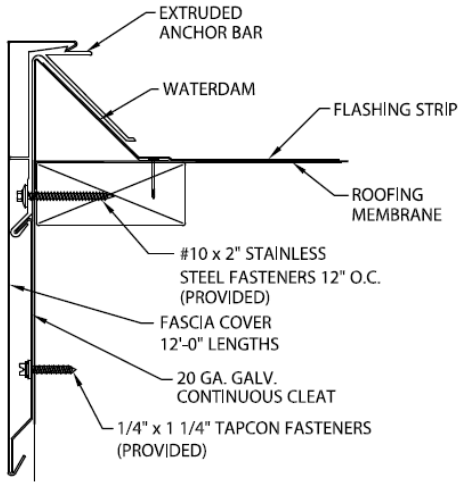

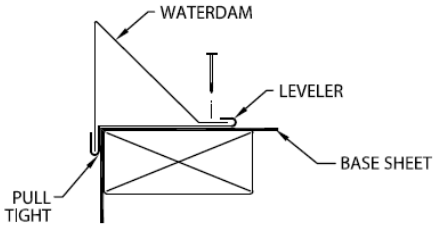

WATERDAM MUST BE PULLED TIGHT TO THE OUTSIDE FACE OF THE BUILDING BEFORE NAILING THE ROOF FLANGE.

ANCHOR-TITE EXTENDED FASCIA-B.U.R./MODIFIED VERSION OR ANCHOR-TITE EXTENDED CANTED FASCIA

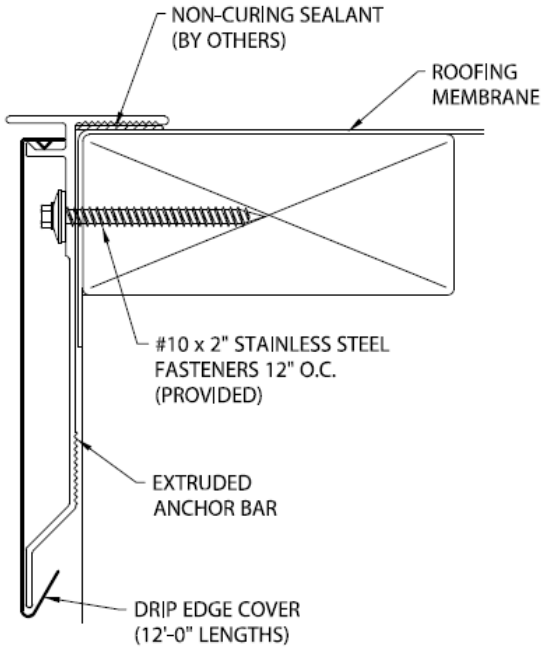

ANCHOR-TITE DRIP EDGE

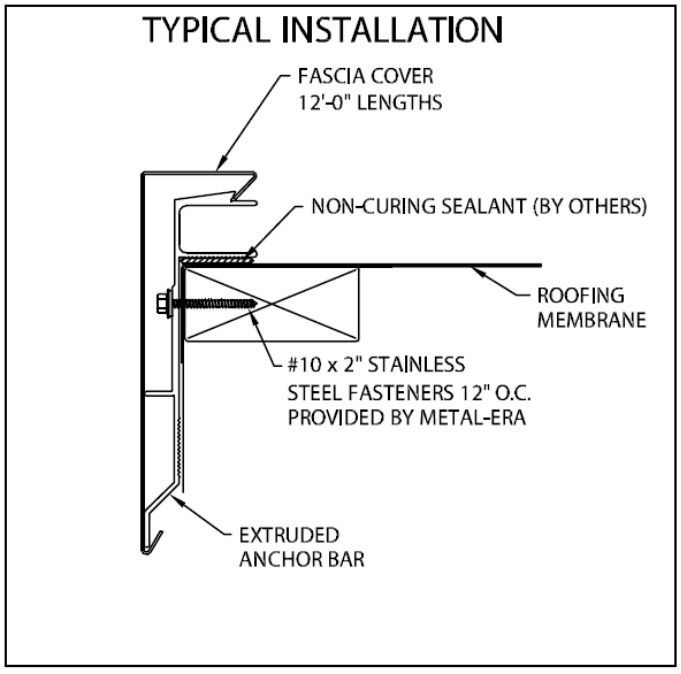

ANCHOR-TITE HG FASCIA-SINGLE PLY VERSION

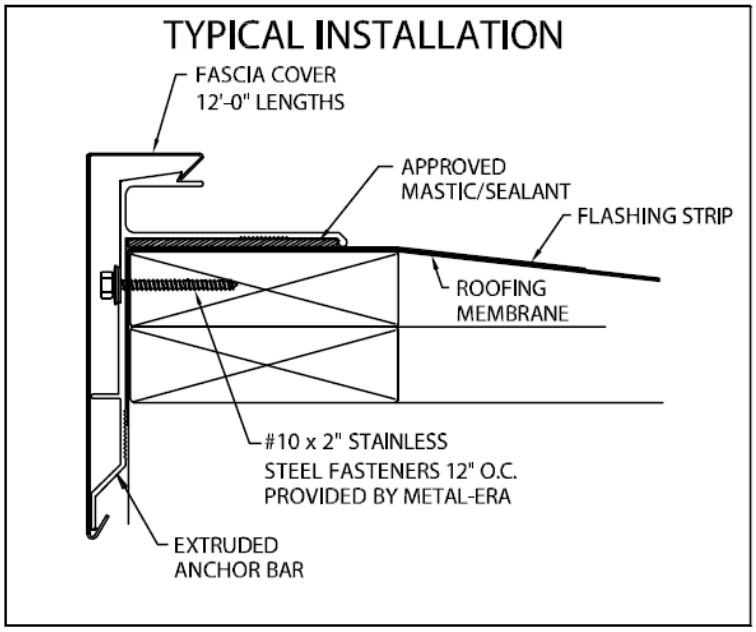

ANCHOR-TITE HG FASCIA-B.U.R./MODIFIED VERSION

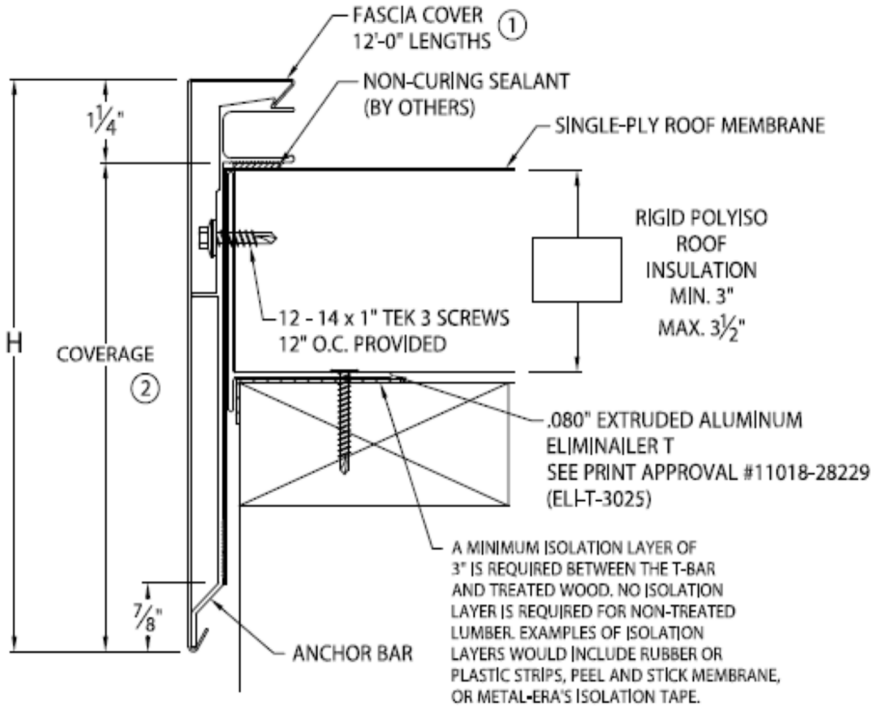

ANCHOR-TITE HG FASCIA-SINGLE PLY & B.U.R/MODIFIED WITH ELIMINAILER-T

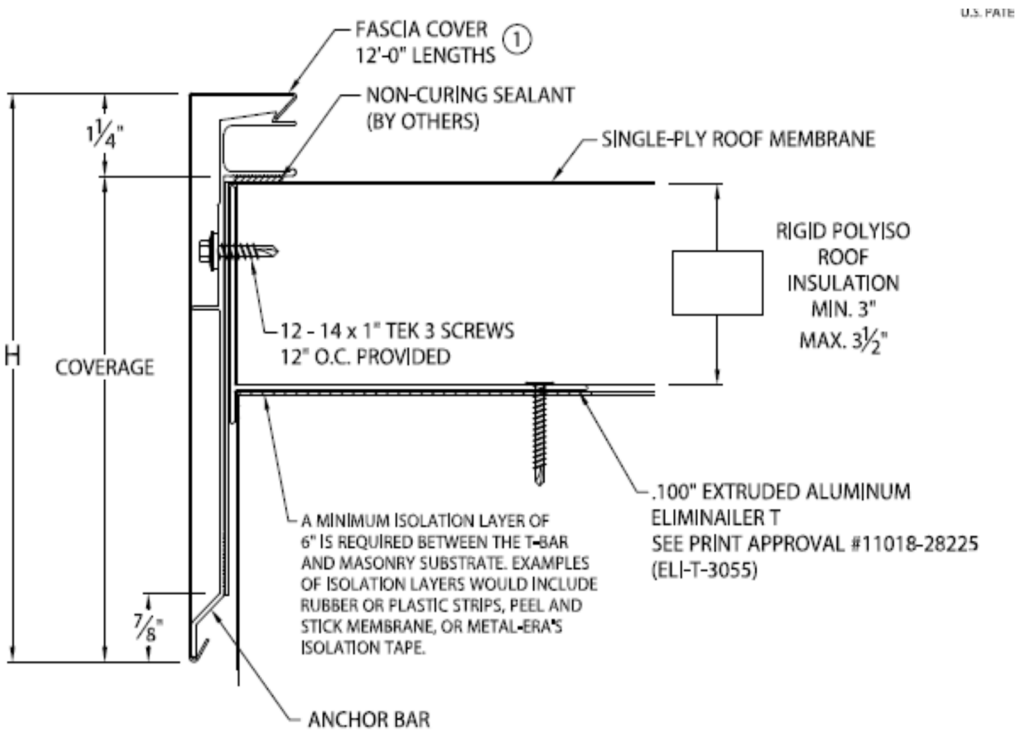

ANCHOR-TITE HG FASCIA-SINGLE PLY & B.U.R/MODIFIED WITH ELIMINAILER-T (CONTINUE)

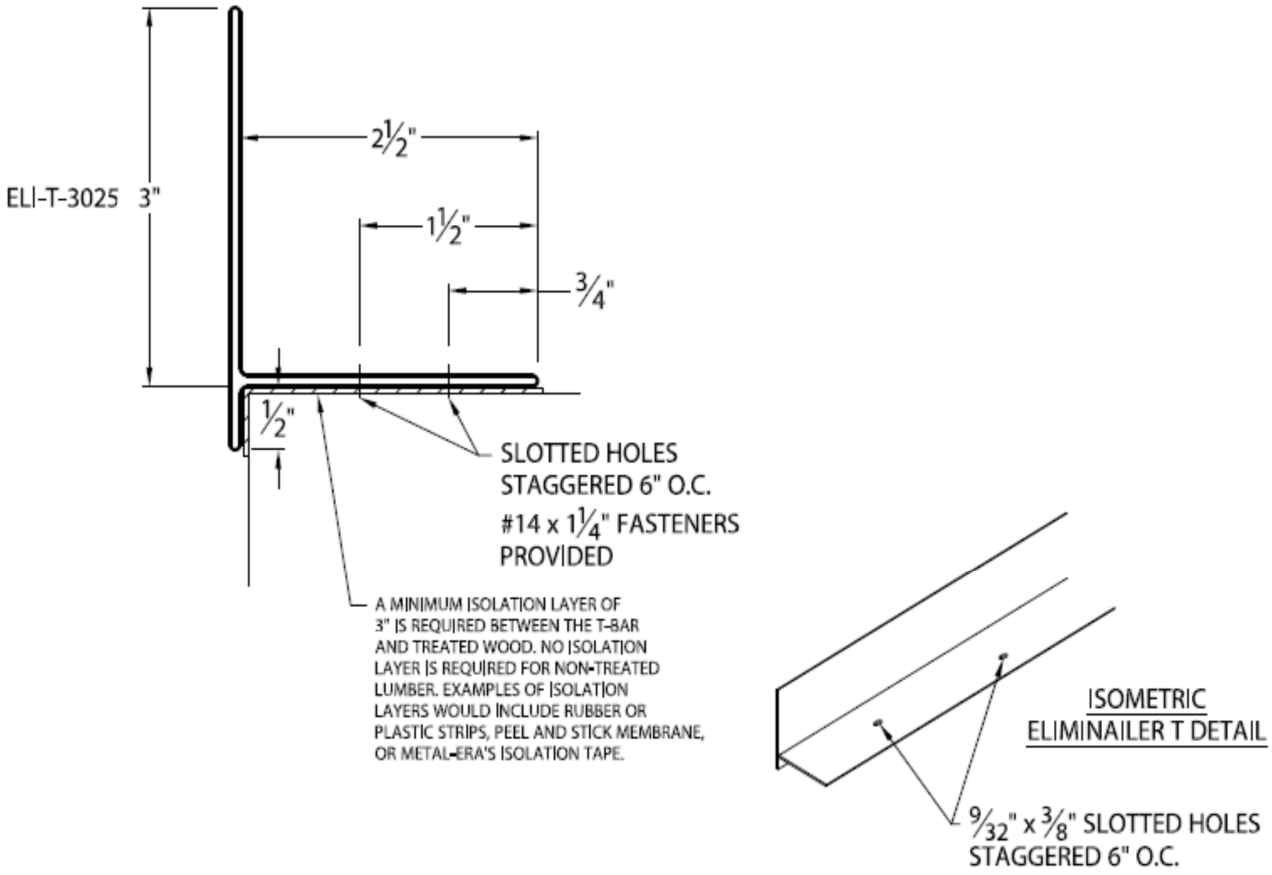

ELIMINAILER-T (SUB-ASSEMBLY PERFORMANCE)

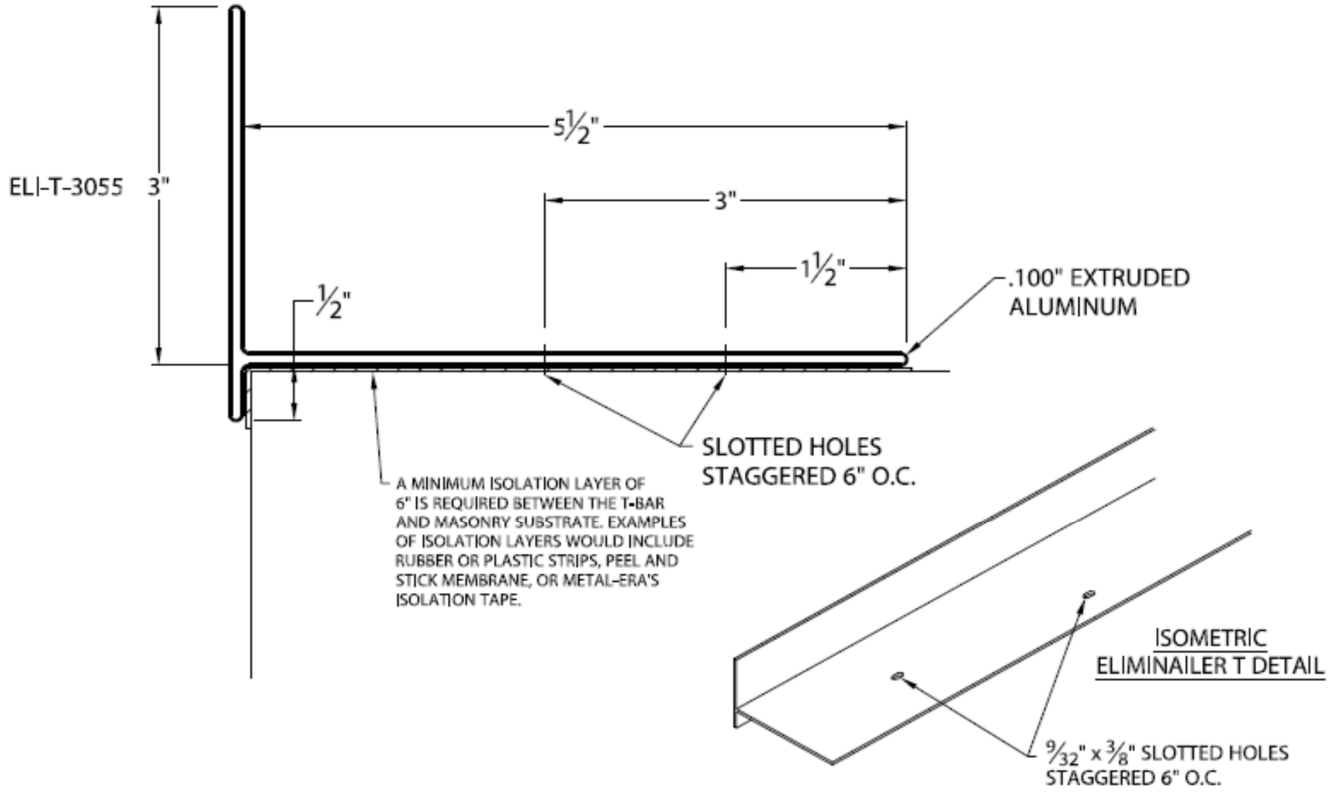

ELIMINAILER-T (SUB-ASSEMBLY PERFORMANCE)
(CONTINUE)

TYPICAL INSTALLATION FOR 12'-0" STRAIGHT COVER

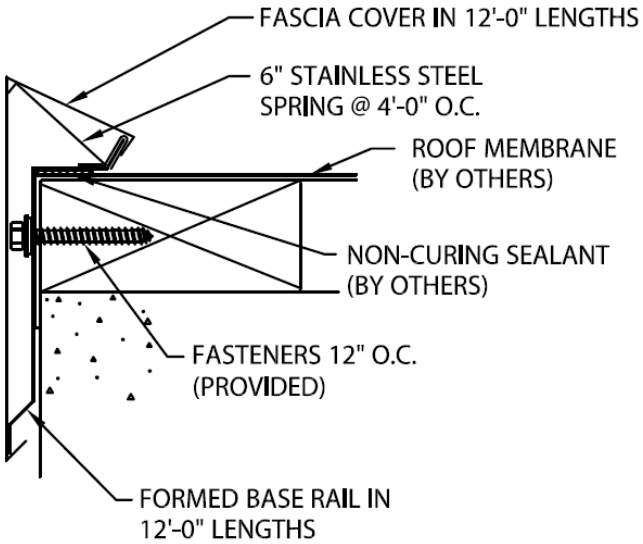

ONE EDGE (MODIFIED) OR ONE EDGE (SINGLE PLY)

TYPICAL INSTALLATION

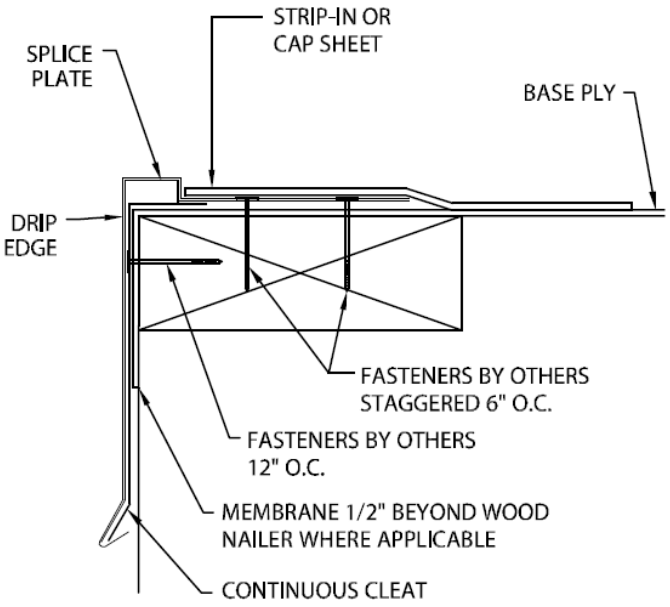

FLASH-THROUGH DRIP EDGE

TYPICAL INSTALLATION

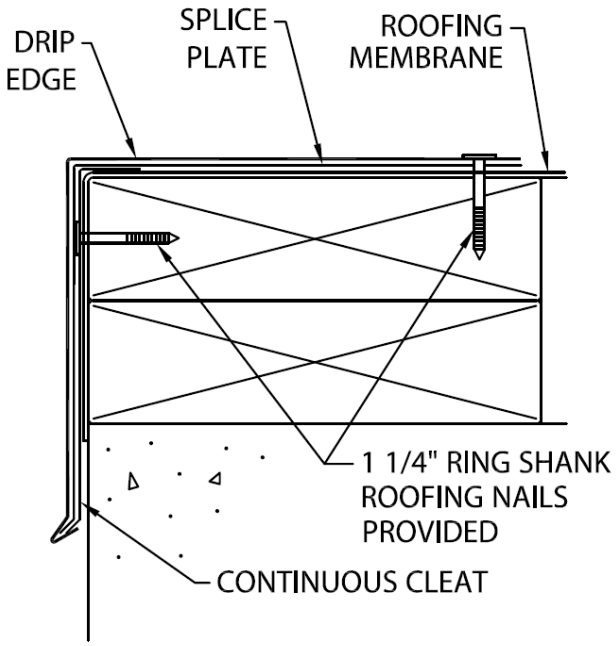

ONE DRIP EDGE

TYPICAL INSTALLATION FOR 12'-0" STRAIGHT COVER

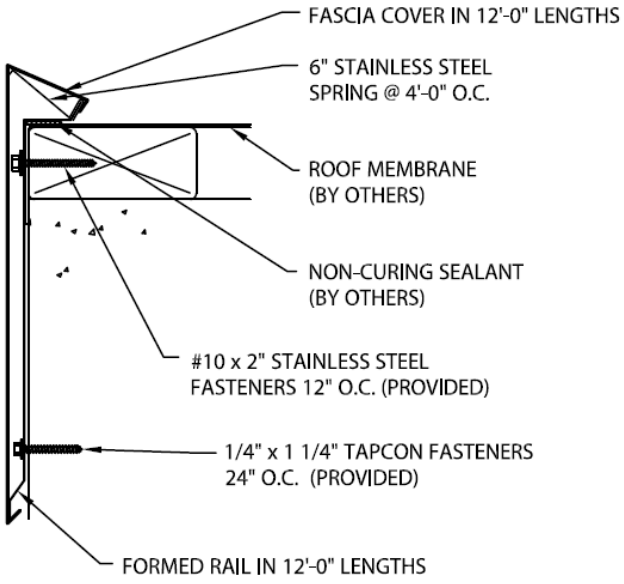

ONE EDGE EXTENDED FASCIA

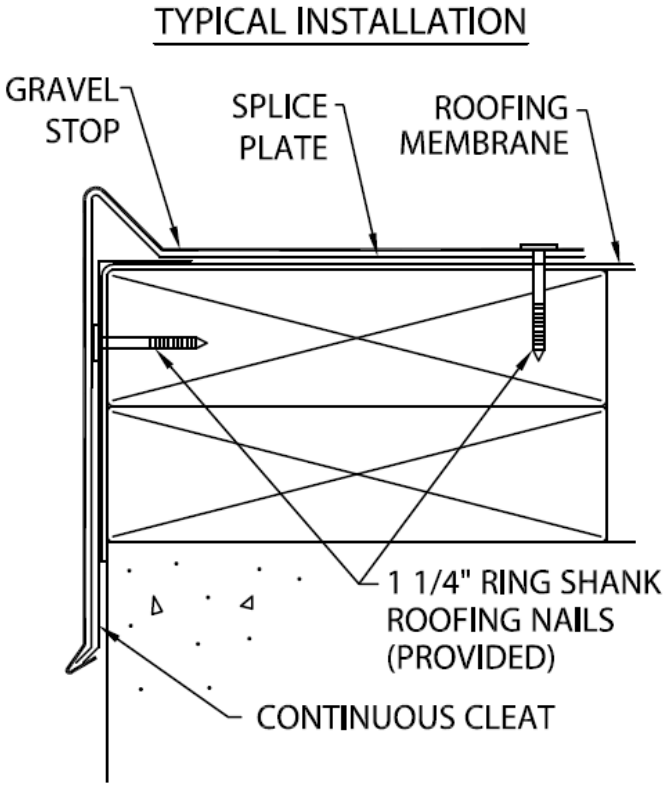

ONE GRAVEL STOP

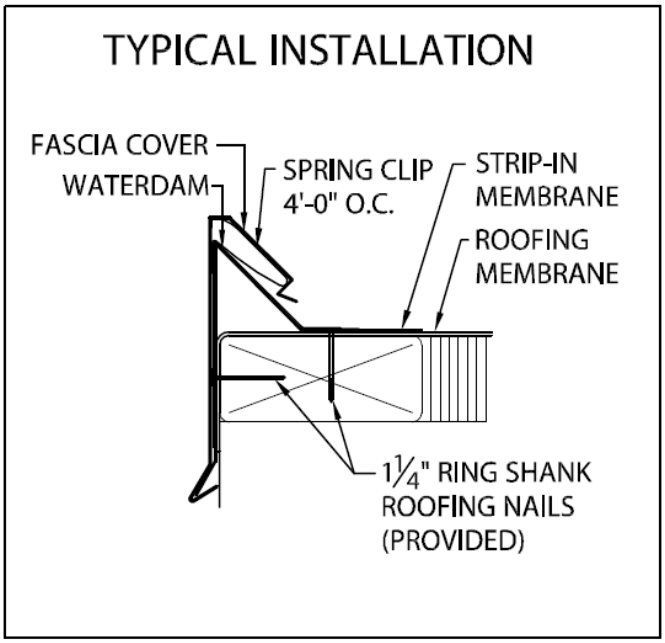

PERMA-TITE SYSTEM 200 FASCIA, SINGLE PLY, CRIMP-ON OR SNAP-ON

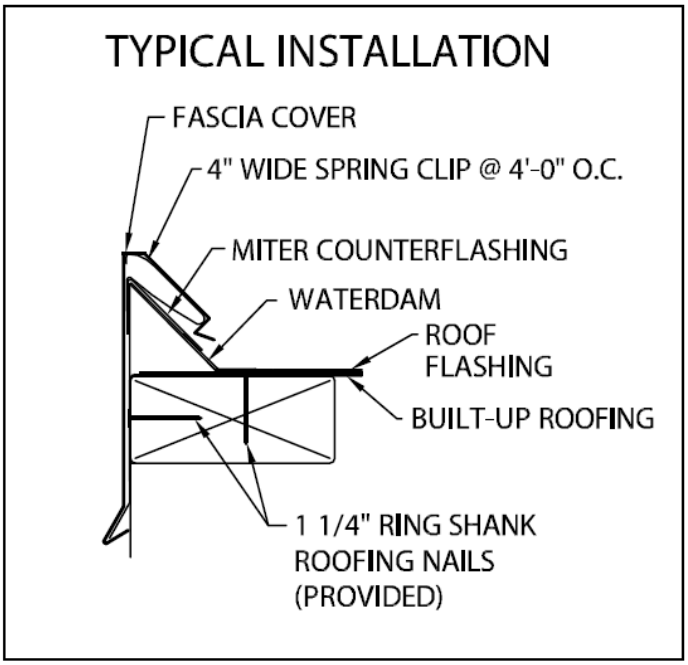

PERMA-TITE SYSTEM 300 FASCIA, MODIFIED, SNAP-ON

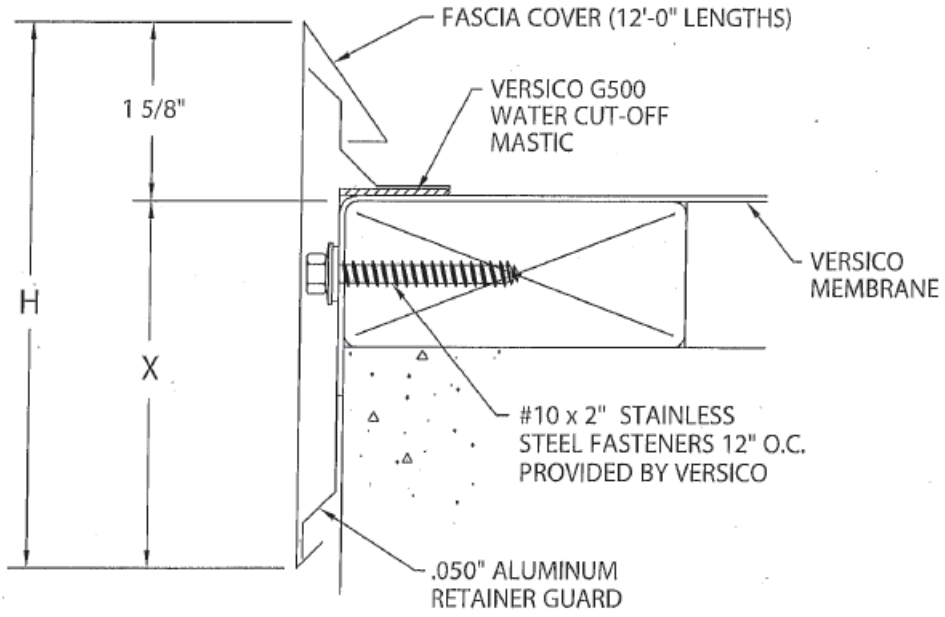

VERSITRIM FASCIA SYSTEM

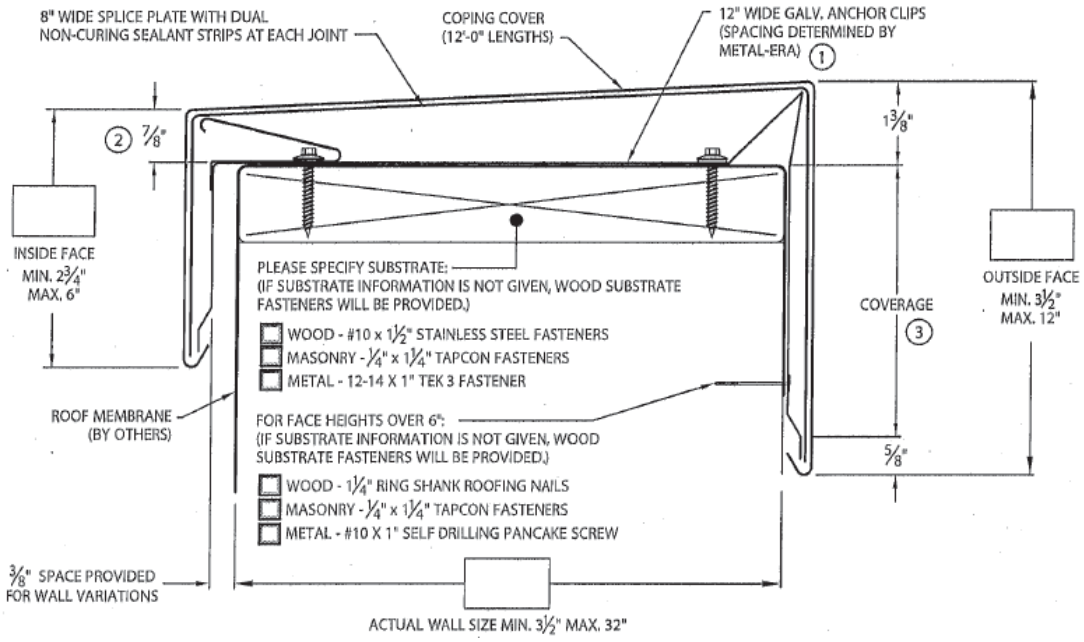

PERMA-TITE FLUSH FACE COPING

TYPICAL INSTALLATION

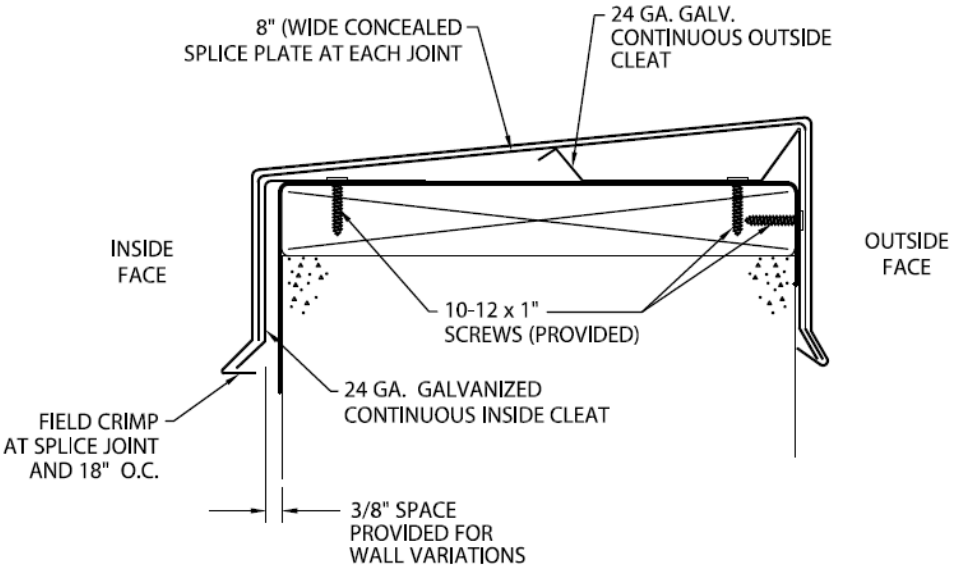

PERMA-TITE CONTINUOUS CLEAT COPING

TYPICAL INSTALLATION DETAIL A

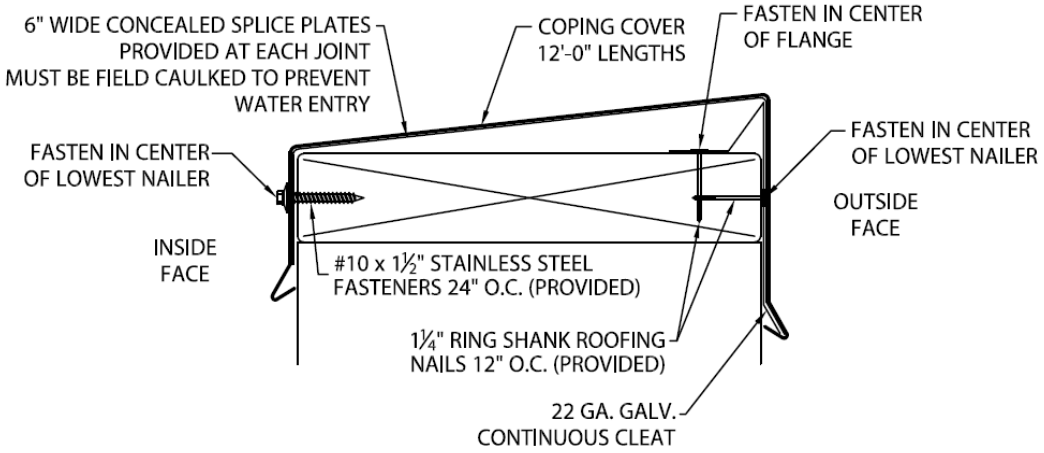

PERMA-TITE CONTINUOUS 16 GA CLEAT COPING (TAPERED, FLAT AND EXISTING SLOPE)

TYPICAL COPING INSTALLATION

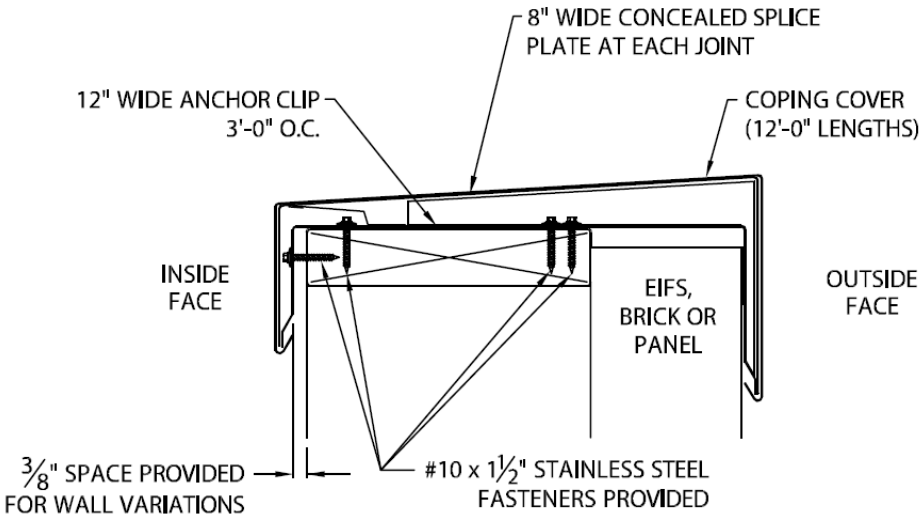

PERMA-TITE SINGLE CANTILEVER GOLD COPING

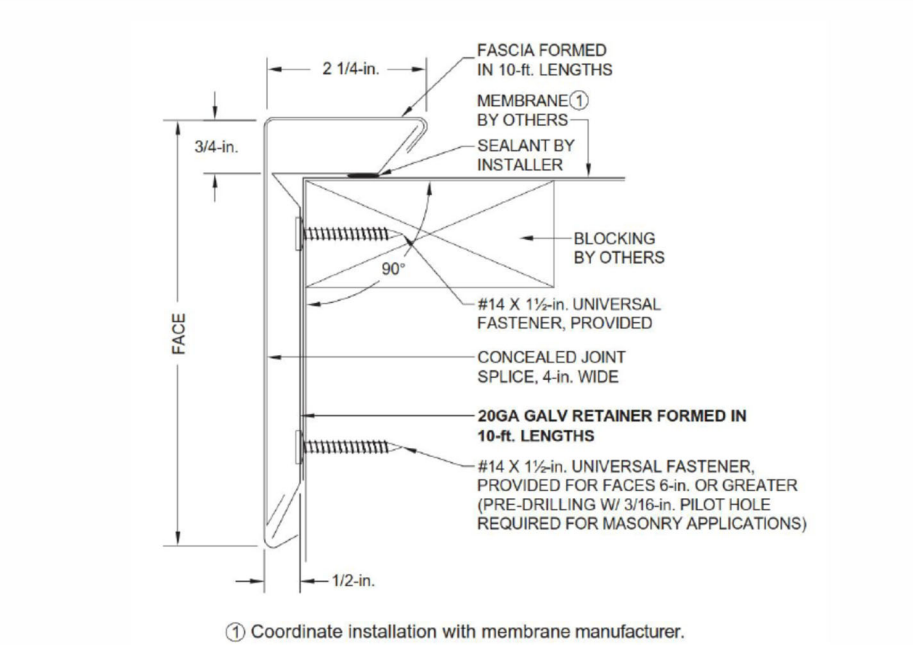

DP ONE EDGE FASCIA (GALV CLEAT)

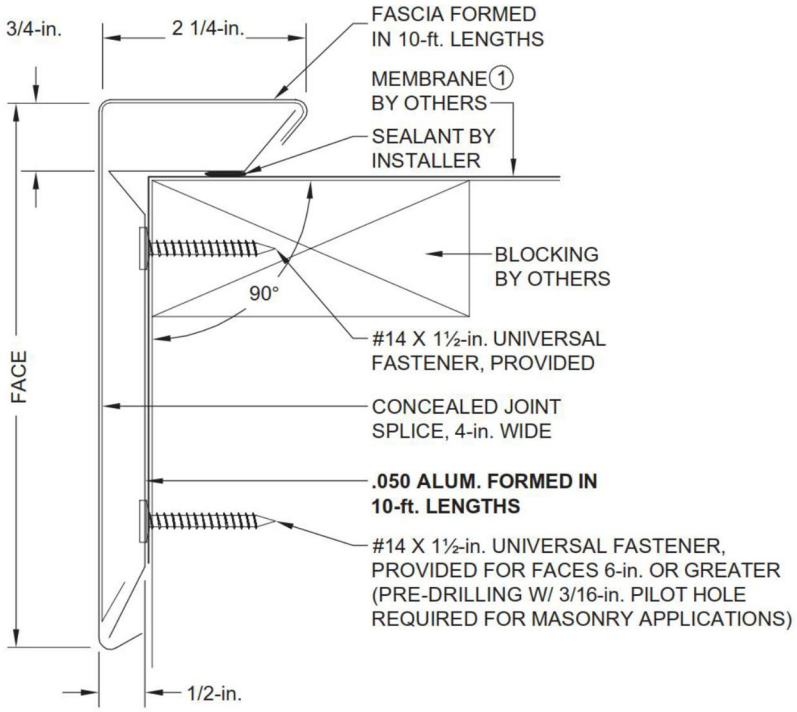

① Coordinate installation with membrane manufacturer.

DP ONE EDGE FASCIA (AL CLEAT)

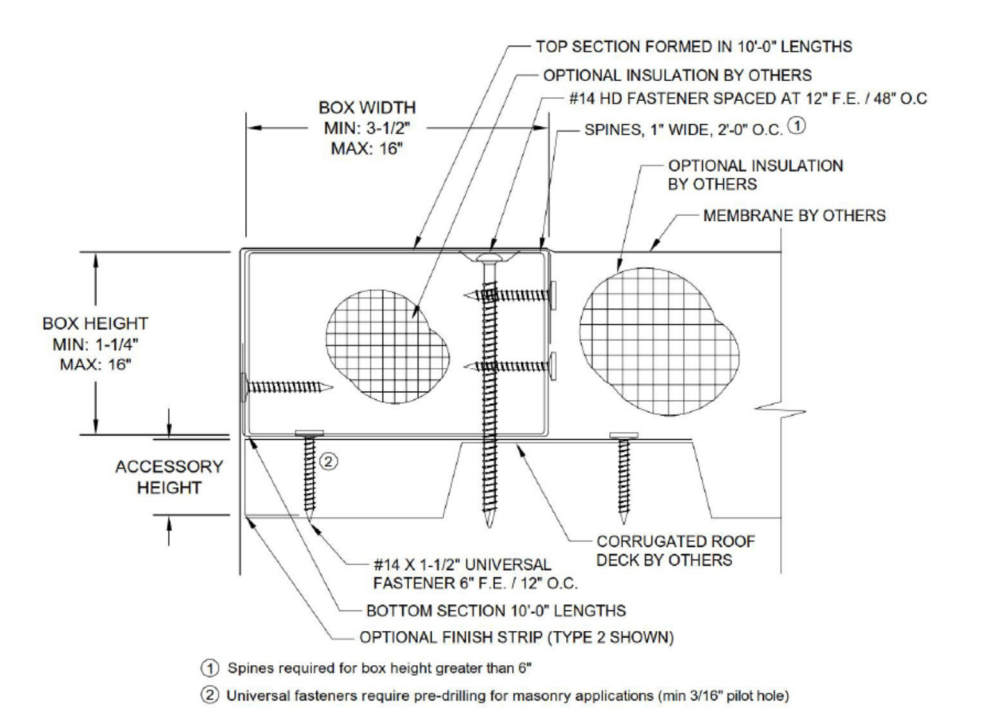
TOP SECTION FORMED IN 10'-0" LENGTHS
OPTIONAL INSULATION BY OTHERS
#14 HD FASTENER SPACED AT 12" F.E. / 48" O.C
BOX WIDTH
MIN: 3-1/2"
MAX: 16"
SPINES, 1" WIDE, 2'-0" O.C. ①
OPTIONAL INSULATION
BY OTHERS
MEMBRANE BY OTHERS
BOX HEIGHT
MIN: 1-1/4"
MAX: 16"
ACCESSORY
HEIGHT
②
CORRUGATED ROOF
DECK BY OTHERS
#14 X 1-1/2" UNIVERSAL
FASTENER 6" F.E. / 12" O.C.
BOTTOM SECTION 10'-0" LENGTHS
OPTIONAL FINISH STRIP (TYPE 2 SHOWN)
① Spines required for box height greater than 6"
② Universal fasteners require pre-drilling for masonry applications (min 3/16" pilot hole)

EDGEBOX RI

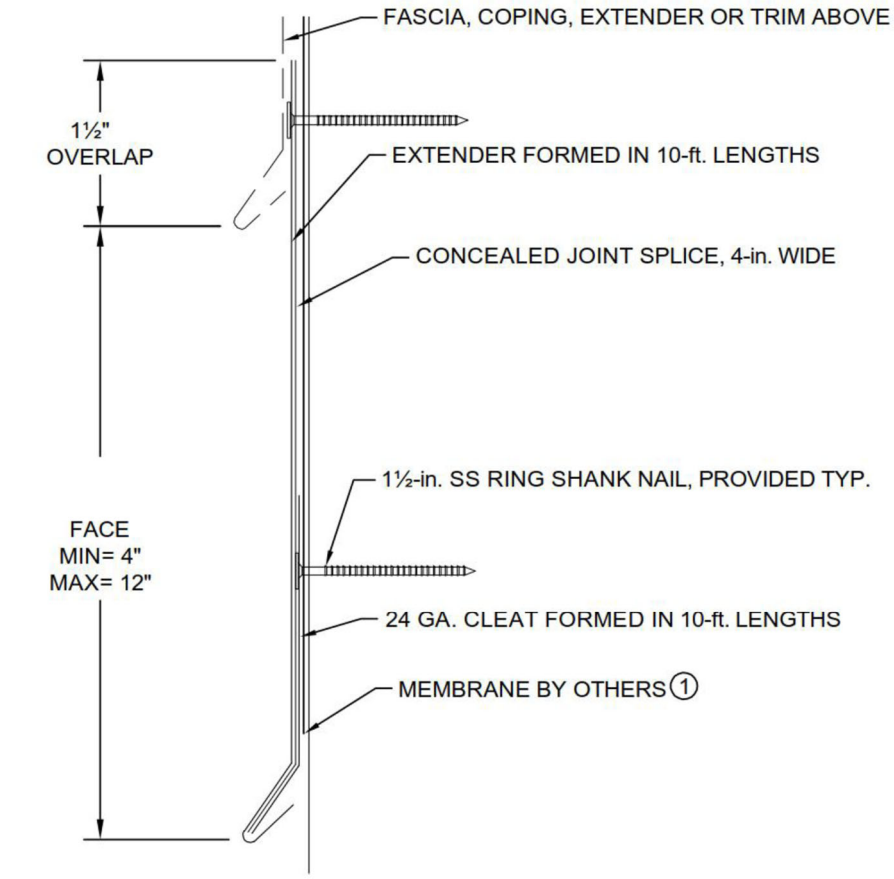
FASCIA, COPING, EXTENDER OR TRIM ABOVE
1½"
OVERLAP
EXTENDER FORMED IN 10-ft. LENGTHS
CONCEALED JOINT SPLICE, 4-in. WIDE
1½-in. SS RING SHANK NAIL, PROVIDED TYP.
FACE
MIN= 4"
MAX= 12"
24 GA. CLEAT FORMED IN 10-ft. LENGTHS
MEMBRANE BY OTHERS ①
① Coordinate installation with membrane manufacturer.

EXTENDER

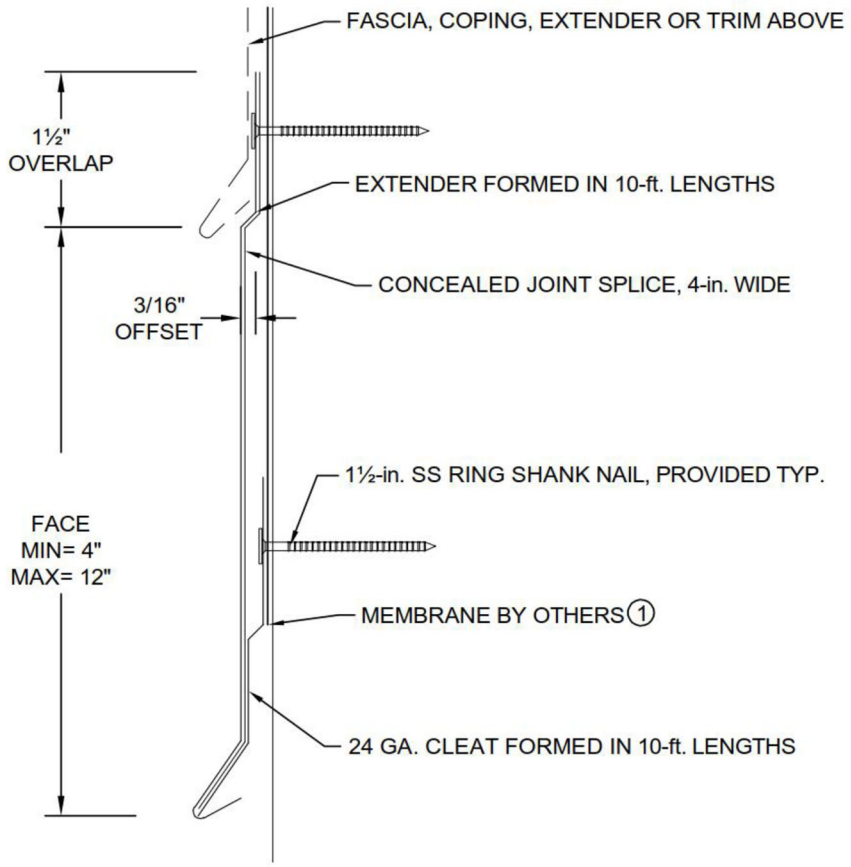

EXTENDER WITH OFFSET

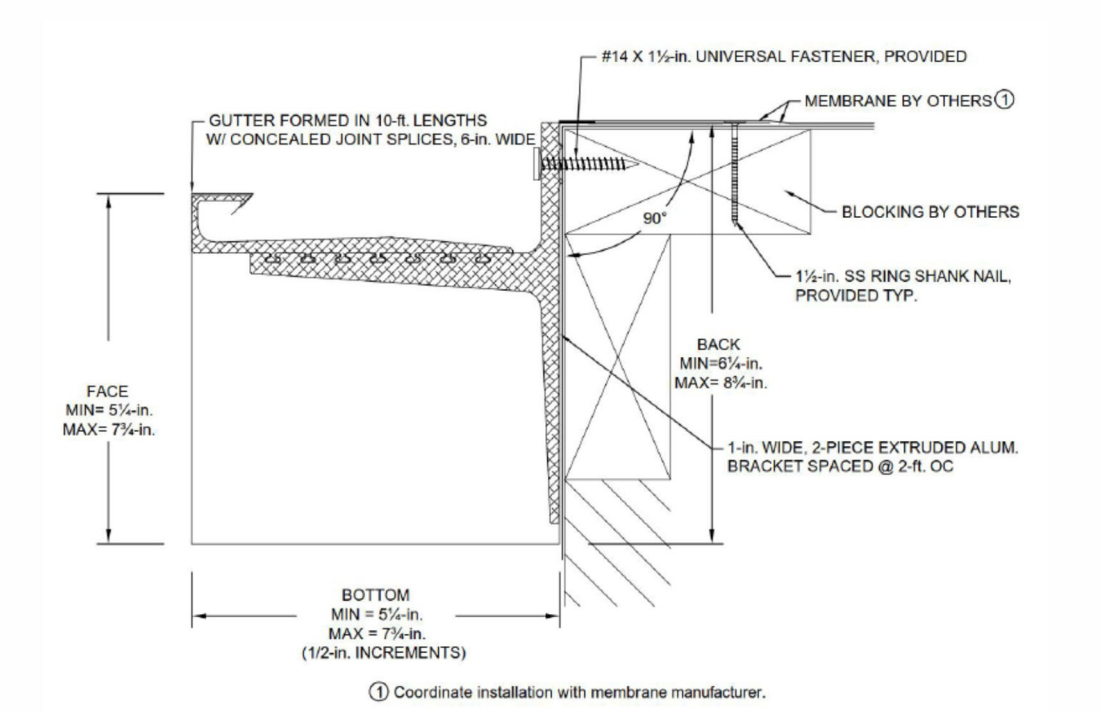

SEAL-TITE WR BOX GUTTER

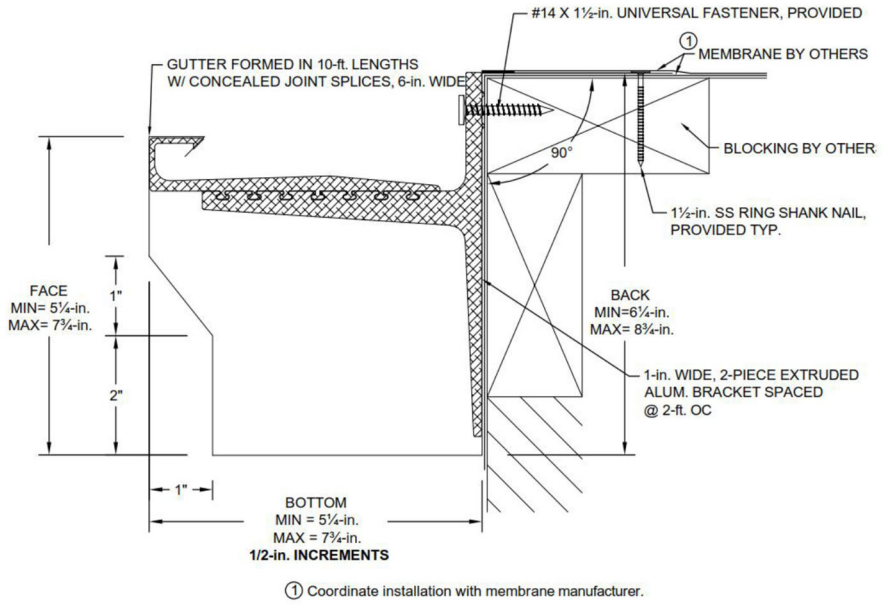

SEAL-TITE WR OFFSET GUTTER

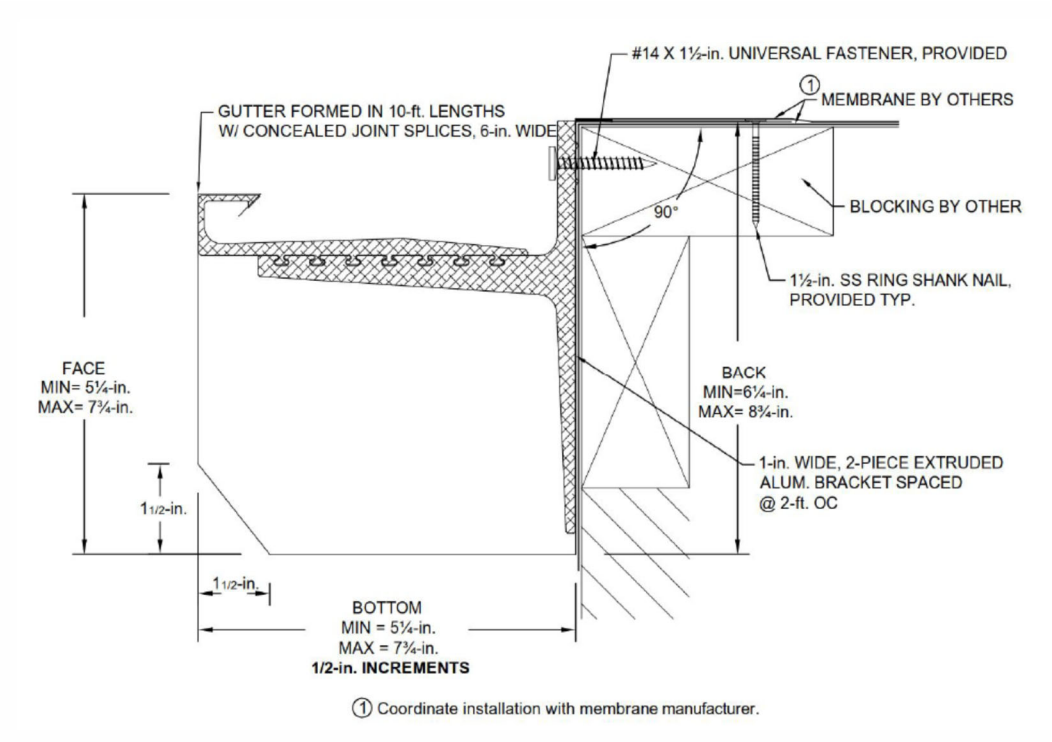

SEAL-TITE WR CHAMFER GUTTER

END OF THIS ACCEPTANCE

Detail Drawings & Product Data Sheets

Detail Drawings
LWC Over CONCRETE DECK

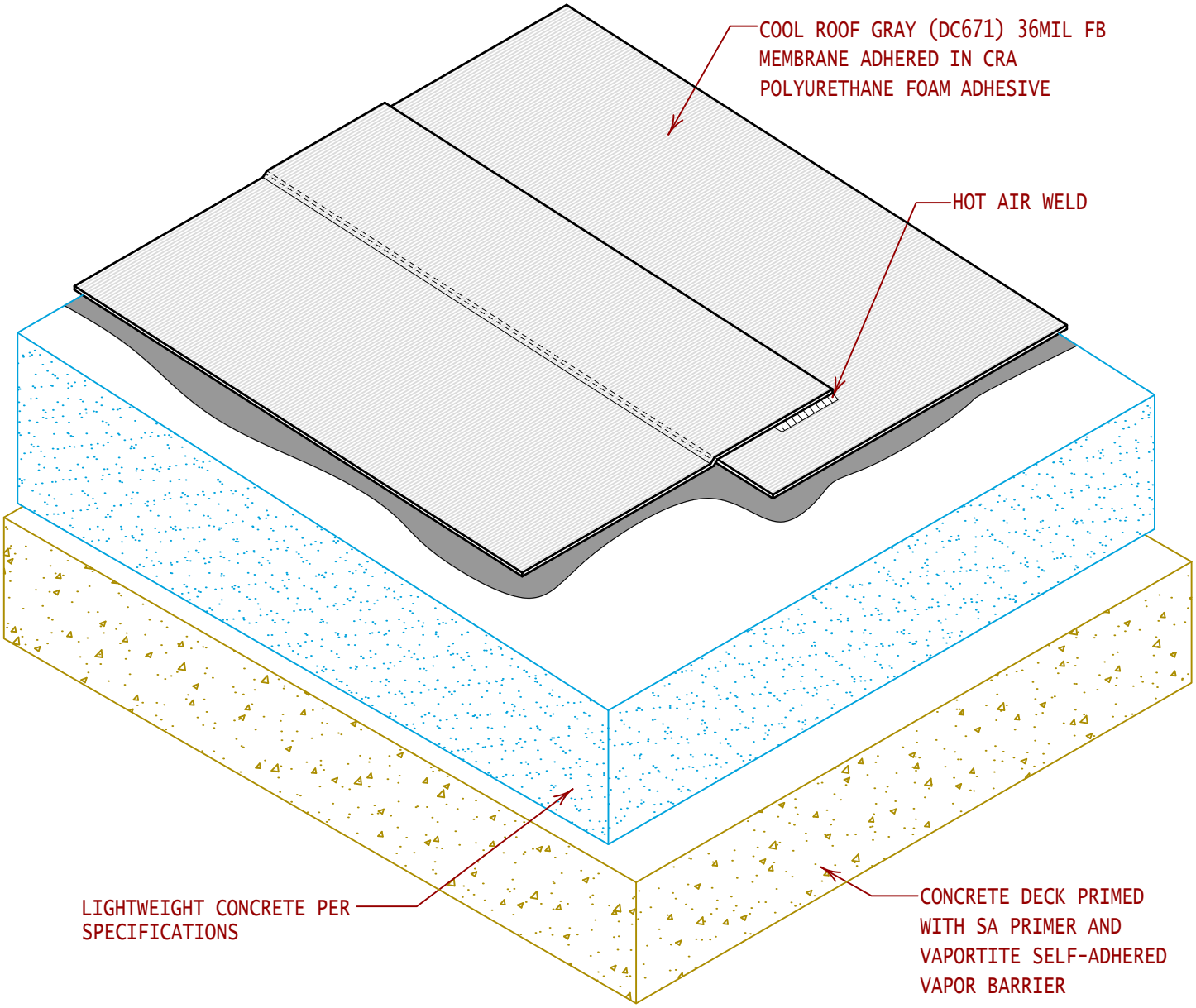

Fiberlite
Seaman Corporation
INTELLIGENT
ROOFING SOLUTIONS

GENERAL REFERENCE:
"FTR GS08-17"

APPLICABLE SYSTEMS:
"FTR AD08-17"

CONCRETE DECK WITH VAPOR BARRIER AND LIGHTWEIGHT CONCRETE INSULATION

REVISES DETAIL	ISSUE DATE	DRAWING NUMBER
ALL PREVIOUS	10-9-26	FTR-LWC1

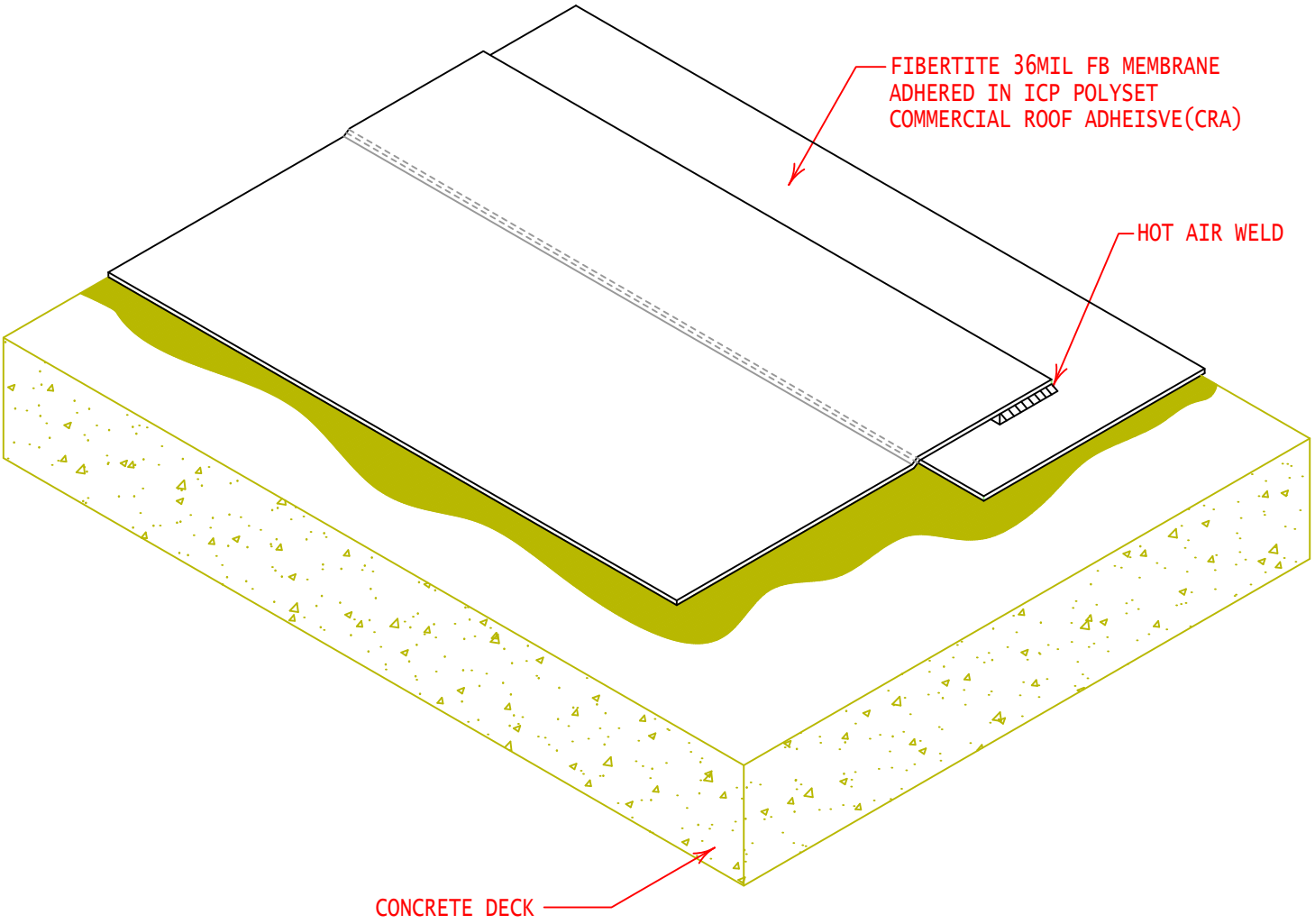

Fiberlite
Seaman Corporation

GENERAL REFERENCE: "FTR GS 01/21"	NON-INSULATED ROOF SYSTEM ADHERED IN CRA/CR-20 ADHESIVE		
APPLICABLE SYSTEMS: "FTR AD 01/21"	REVISES DETAIL	ISSUE DATE	DRAWING NUMBER
	ALL PREVIOUS	10-11-26	FTR-RWVF

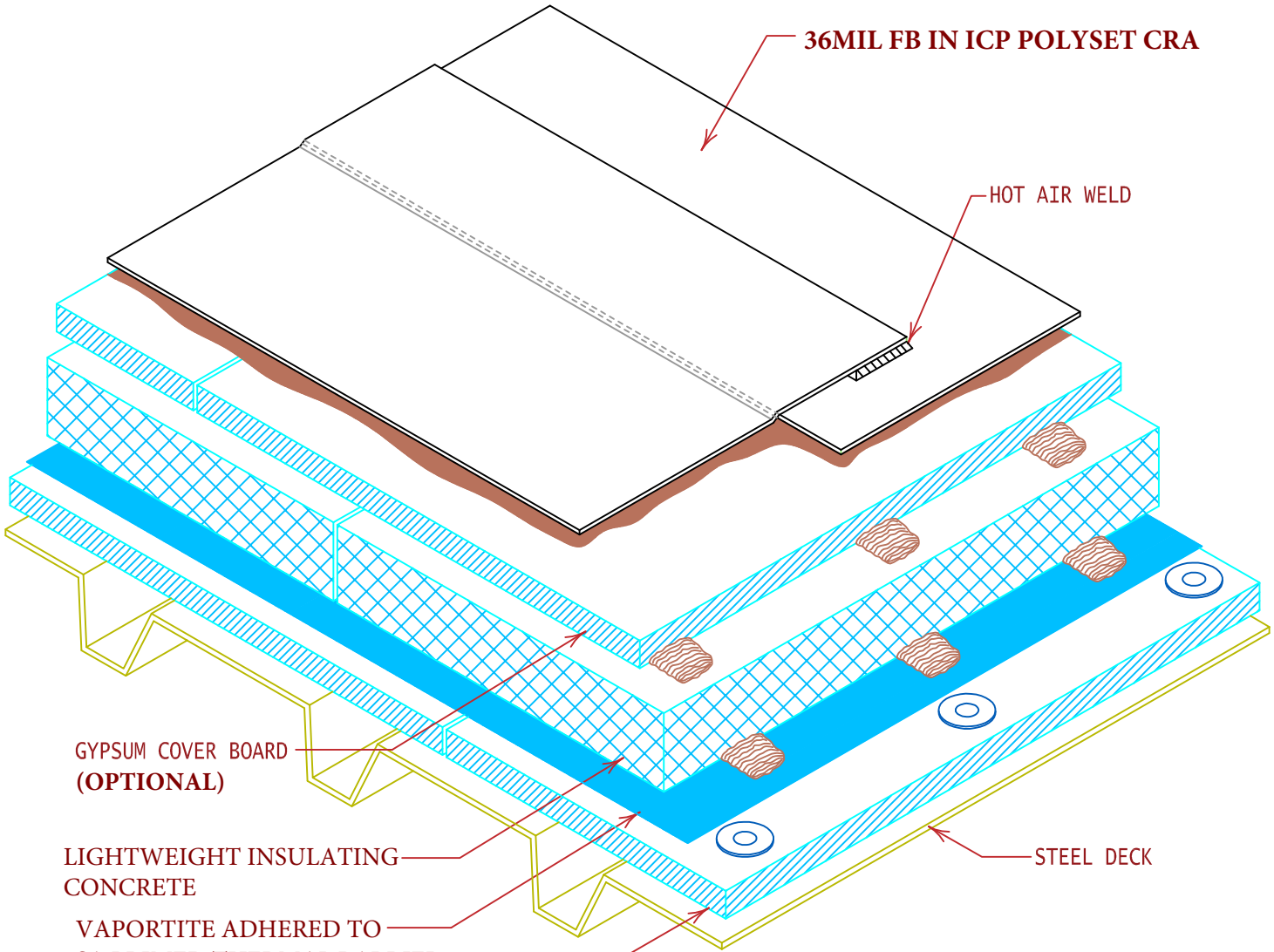

Fiberlite® Seaman Corporation
INTELLIGENT ROOFING SOLUTIONS

GENERAL REFERENCE:
"FTR GS 02/13"

APPLICABLE SYSTEMS:
"FTR MP 02/13"

LIGHTWEIGHT CONCRETE OVER STEEL DECK

REVISES DETAIL	ISSUE DATE	DRAWING NUMBER
ALL PREVIOUS	10-11-26	FTR-DAS18SP

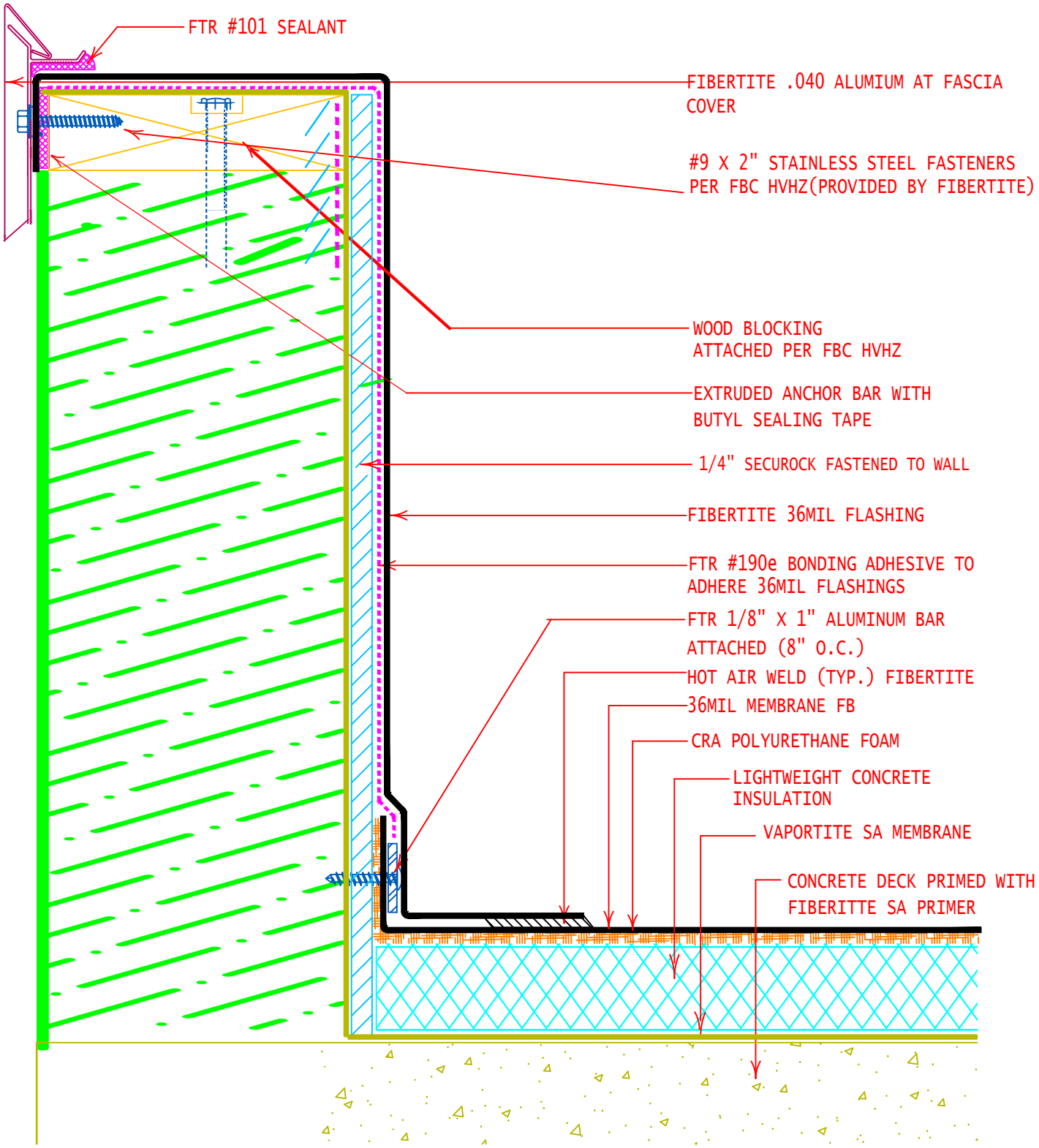

Fiberlite
Siplast Corporation
INTELLIGENT ROOFING SOLUTIONS

GENERAL REFERENCE:
"FTR GS 01/21"

APPLICABLE SYSTEMS:
"FTR AD 01/21"

PARAPET WALL FLASHING WITH AT FASCIA EAST AND WEST WALLS ROOF A1

REVISES DETAIL	ISSUE DATE	DRAWING NUMBER
ALL PREVIOUS	10-9-26	FTR-PDSE

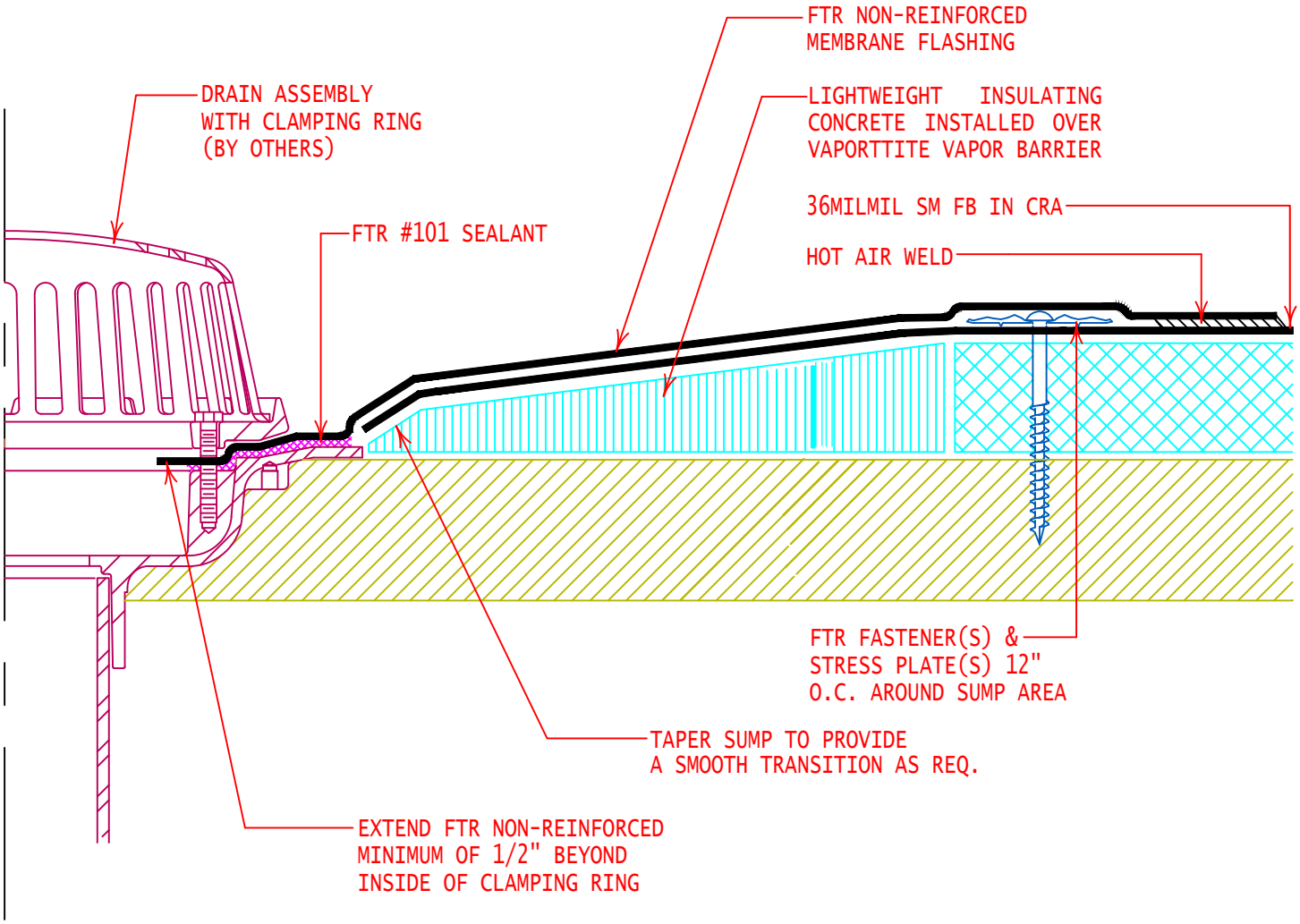

Fiberlite
Seaman Corporation

GENERAL REFERENCE:
"FTR GS 01/21"

APPLICABLE SYSTEMS:
"FTR MA 01/21"
"FTR AD 01/21"
"FTR BA 01/21"

TYPICAL DRAIN FLASHING REINFORCED MEMBRANE

REVISES DETAIL	ISSUE DATE	DRAWING NUMBER
ALL PREVIOUS	10-11-26	FTR-DD3

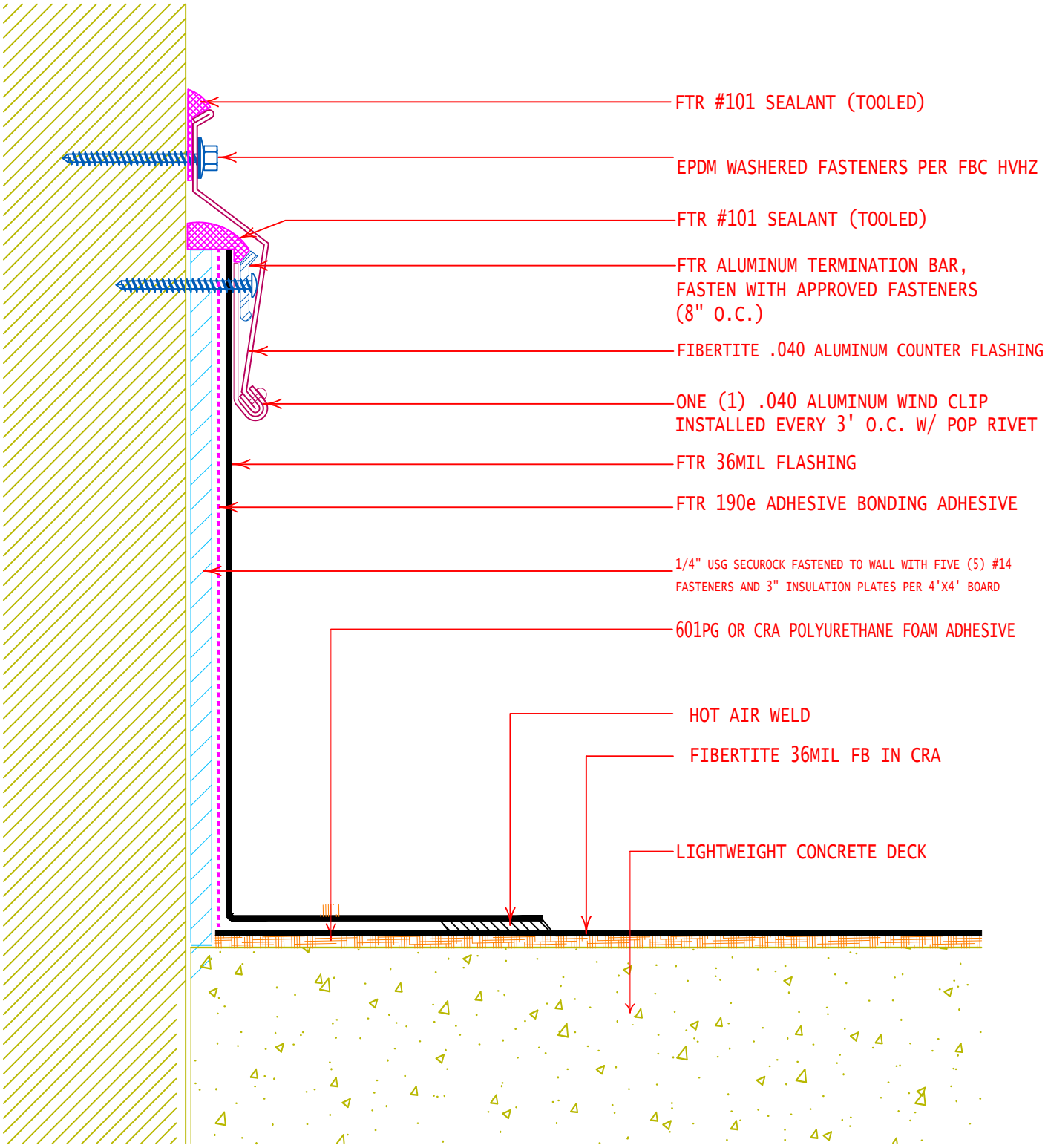

Fiberlite® Siplast Corporation
INTELLIGENT ROOFING SOLUTIONS

GENERAL REFERENCE:
"FTR GS 01/21"

APPLICABLE SYSTEMS:
"FTR MA 01/21"
"FTR AD 01/21"
"FTR BA 01/21"

SURFACE MOUNTED WALL FLASHING W/WIND CLIP

REVISES DETAIL	ISSUE DATE	DRAWING NUMBER
ALL PREVIOUS	10-9-26	FTR-WFWC

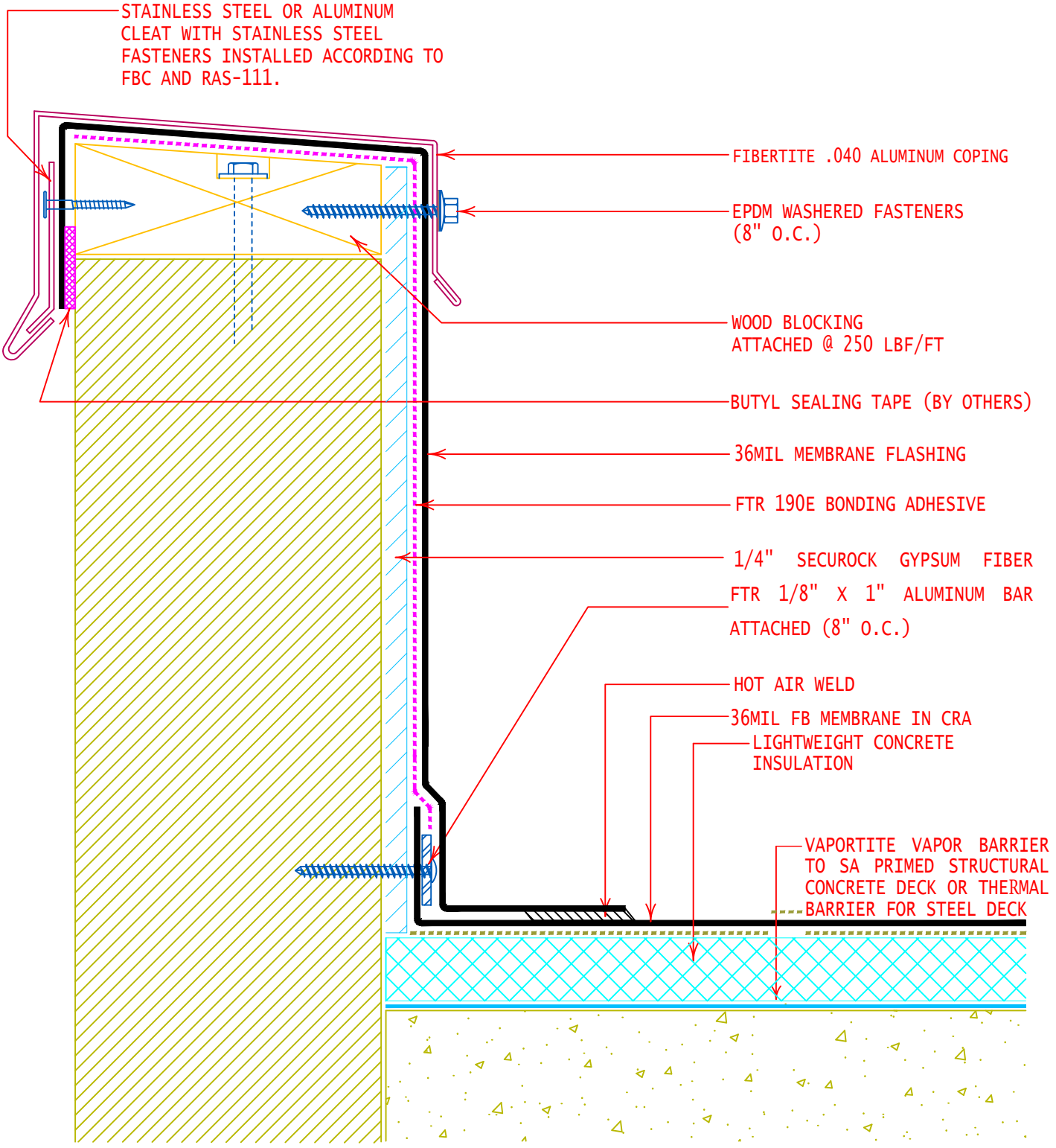

Fiberlite
Siplast Corporation
INTELLIGENT ROOFING SOLUTIONS

GENERAL REFERENCE:
"FTR GS 01/21"

APPLICABLE SYSTEMS:
"FTR AD 01/21"

PARAPET WALL FLASHING WITH COPING CAP

REVISES DETAIL	ISSUE DATE	DRAWING NUMBER
ALL PREVIOUS	10-11-26	FTR-MCPW

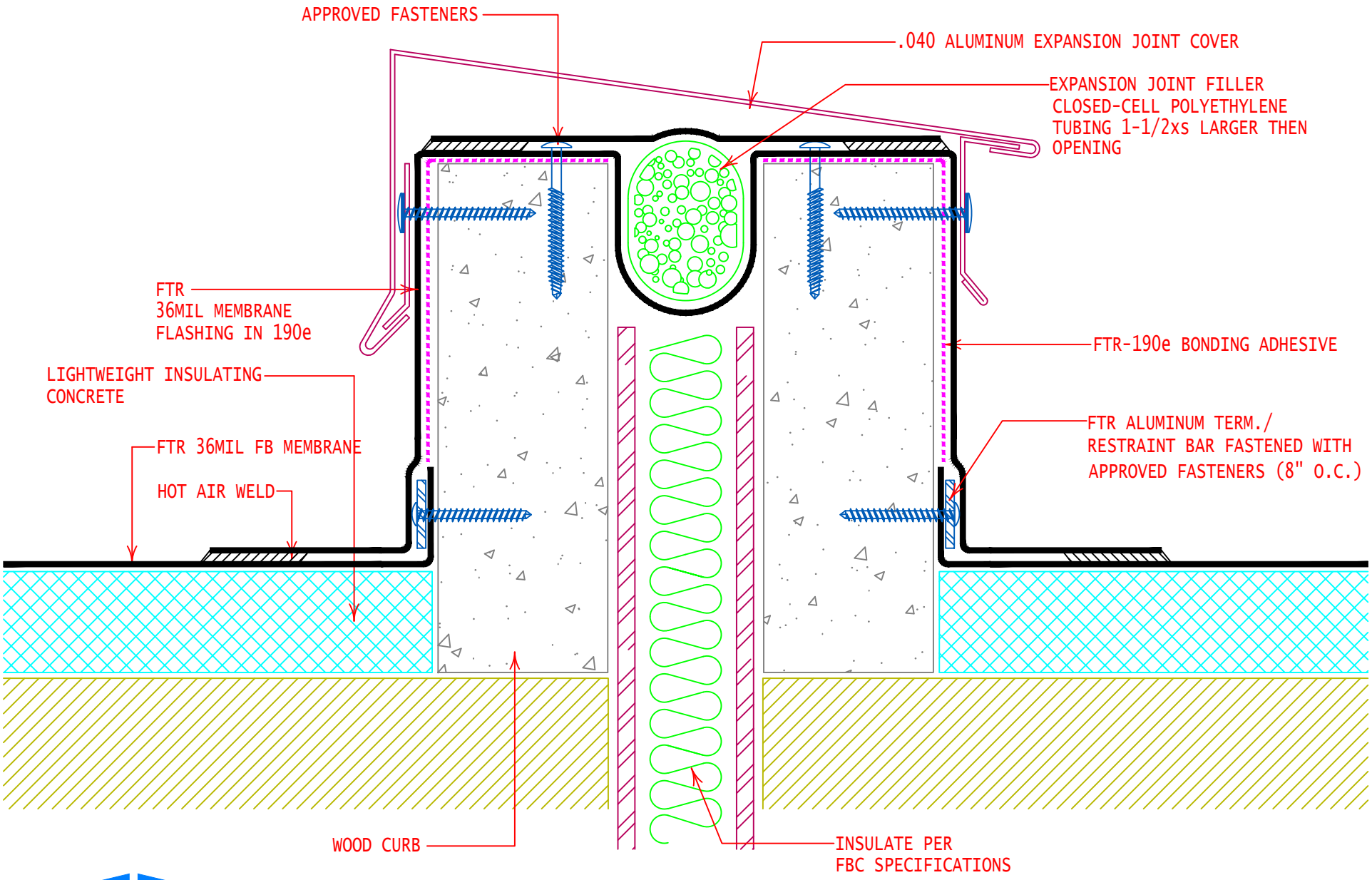

Fiberlite
Seaman Corporation

GENERAL REFERENCE:
"FTR GS 01/21"

APPLICABLE SYSTEMS:
"FTR MA 01/21"
"FTR AD 01/21"
"FTR BA 01/21"

RAISED EXPANSION JOINT WITH METAL EXPASNION JOING COVER

REVISES DETAIL	ISSUE DATE	DRAWING NUMBER
ALL PREVIOUS	10-11-26	FTR-REJC1

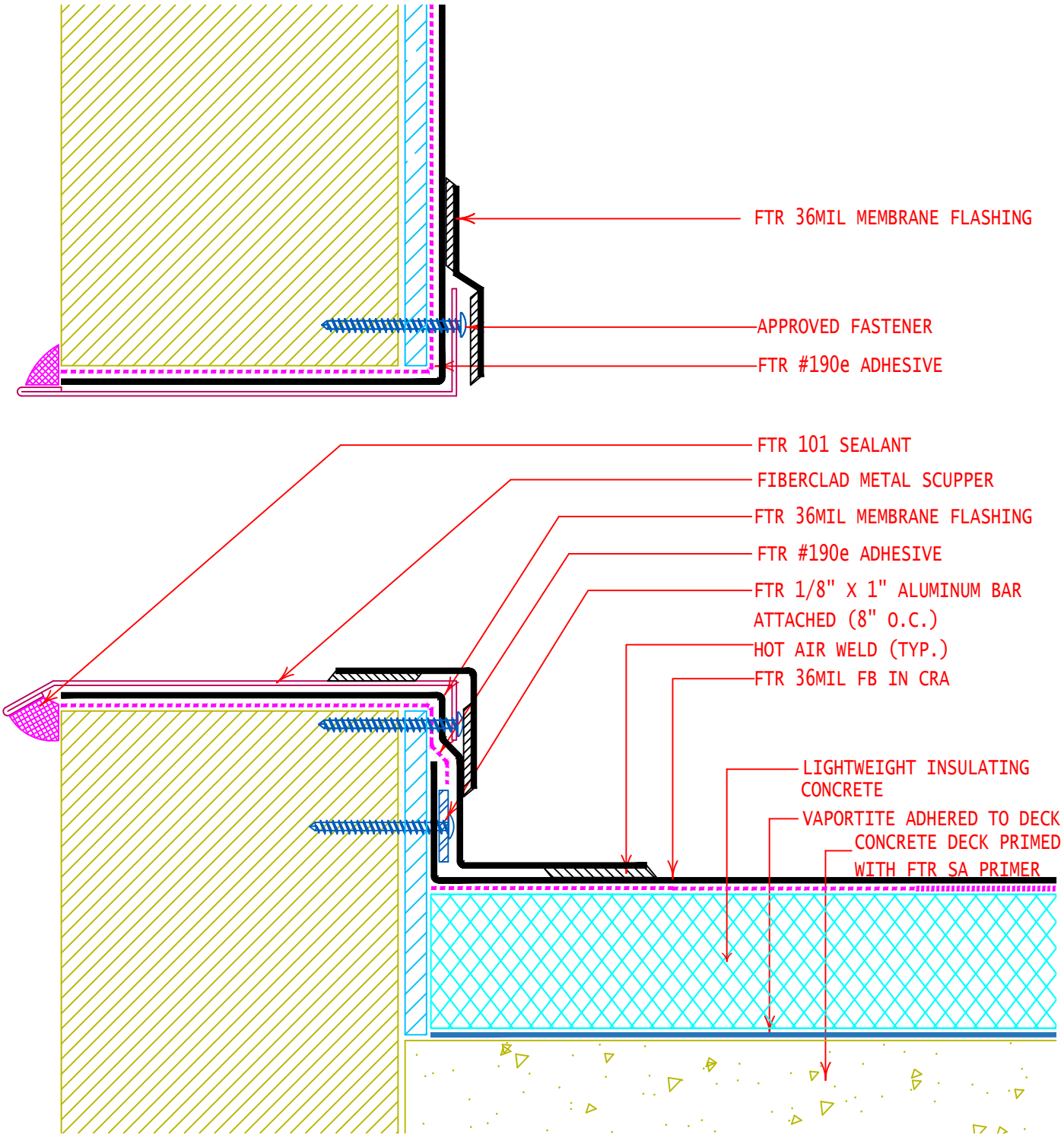

Fiberlite®

Seaman Corporation

GENERAL REFERENCE:
"FTR GS 01/21"

APPLICABLE SYSTEMS:
"FTR AD 01/21"

PARAPET WALL OVERFLOW SCUPPER

REVISES DETAIL	ISSUE DATE	DRAWING NUMBER
ALL PREVIOUS	10-11-26	FTR-OSCC1

CLOSED LAP ATTACHMENT

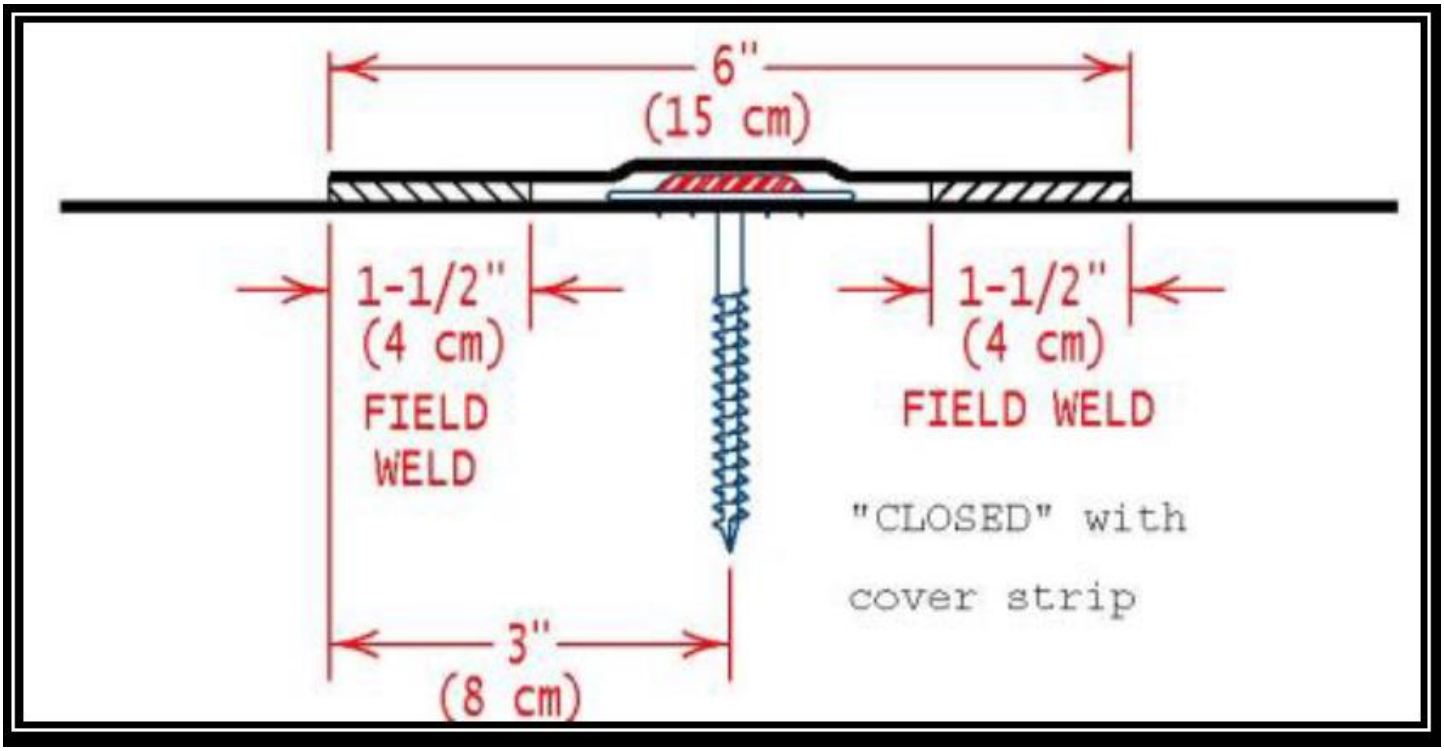

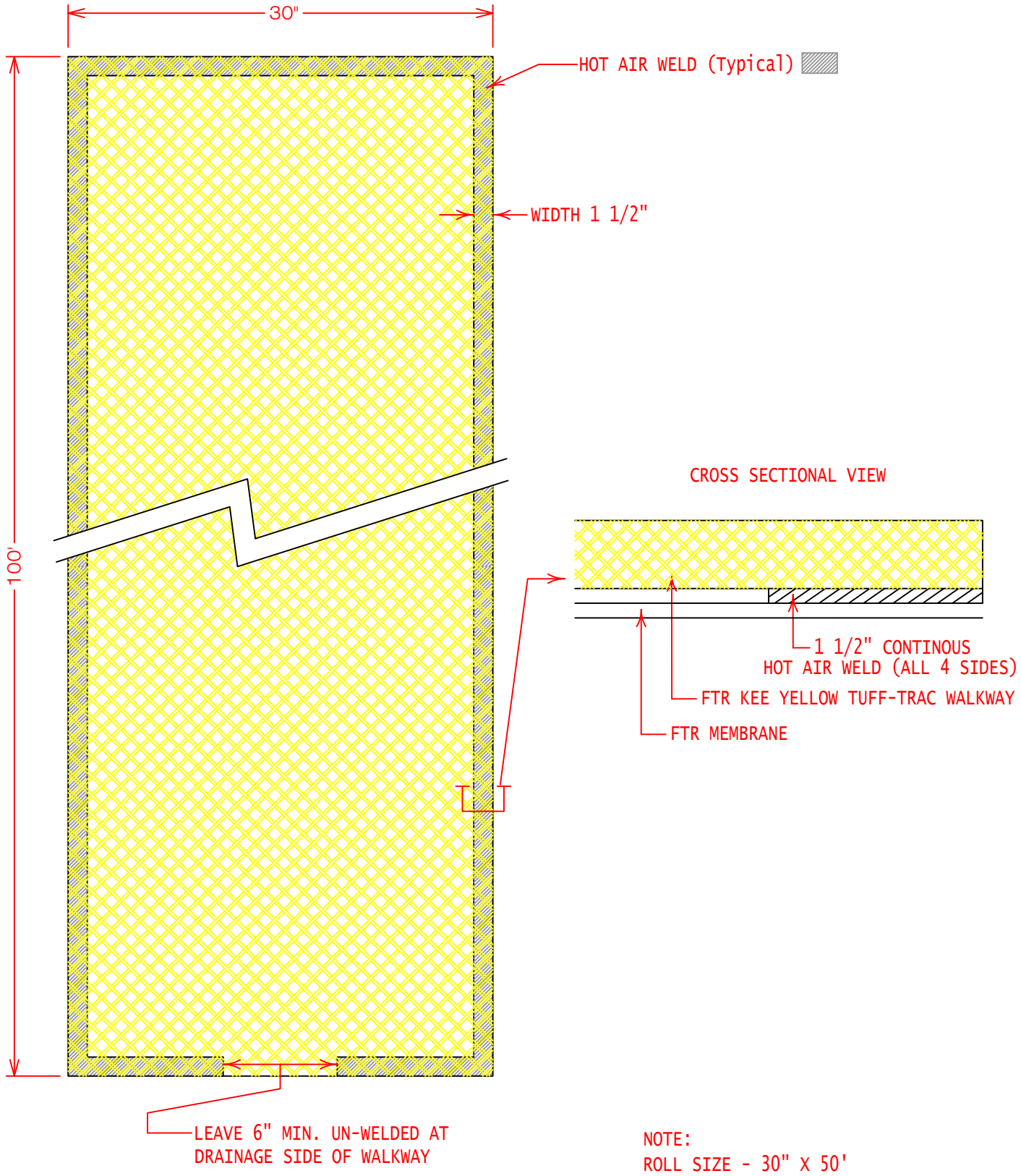

NOTE:
ROLL SIZE - 30" X 50'
CUT TO LENGTH & SHAPE DESIRED

Fiberlite
Siplast Corporation
INTELLIGENT
ROOFING SOLUTIONS

GENERAL REFERENCE:

APPLICABLE SYSTEMS:

FIBERTITE KEE YELLOW TUFF-TRAC WALKWAY

REVISES DETAIL	ISSUE DATE	DRAWING NUMBER
ALL PREVIOUS	10-9-26	FTR-DM1c

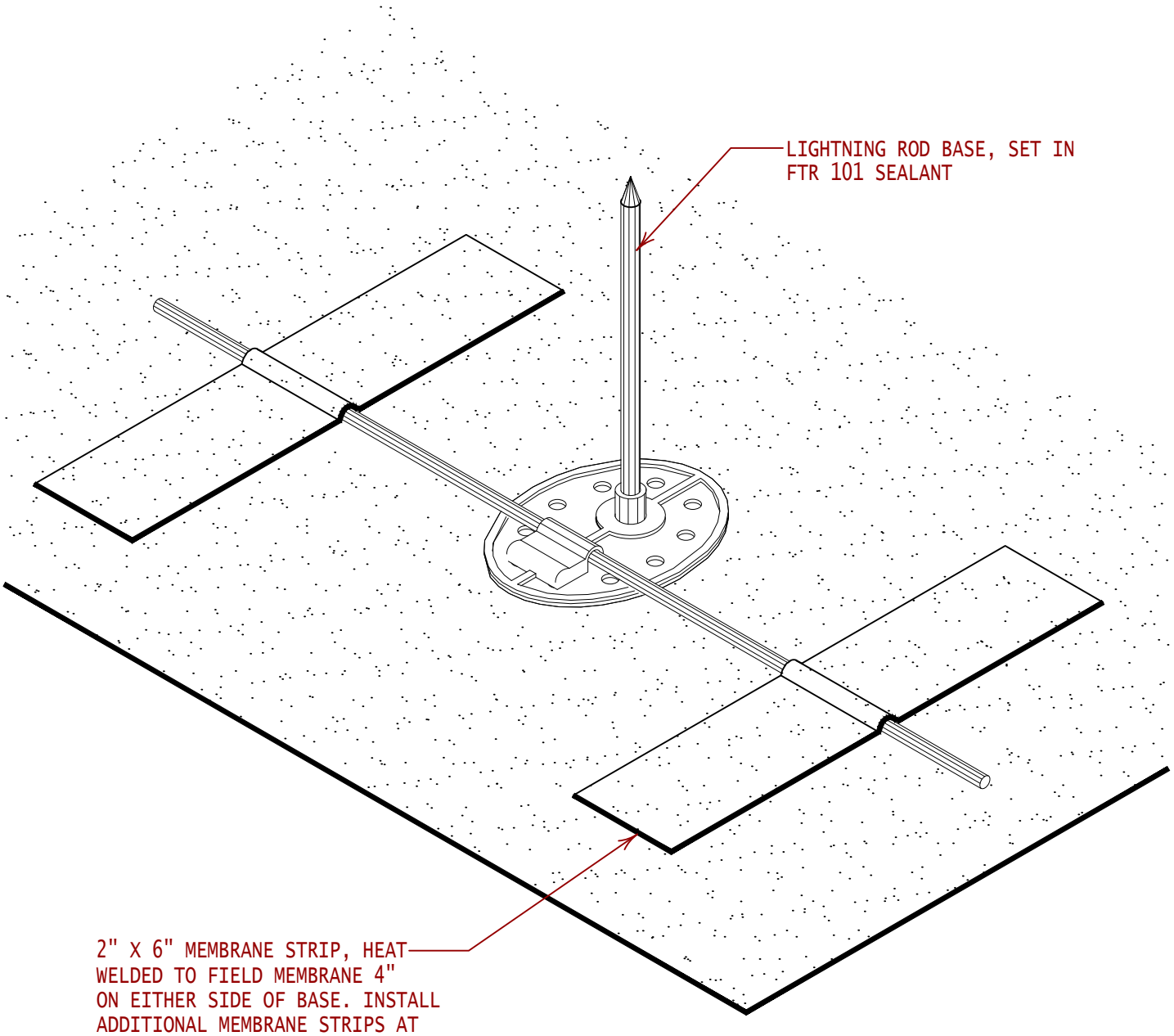

Fiberlite Sealant Corporation
INTELLIGENT ROOFING SOLUTIONS

GENERAL REFERENCE:
"FTR GS 02/13"

APPLICABLE SYSTEMS:
"FTR MA 02/13"
"FTR AD 02/13"
"FTR BA 02/13"

LIGHTNING PROTECTION

REVISES DETAIL	ISSUE DATE	DRAWING NUMBER
ALL PREVIOUS	10/9/26	FTR-DM3

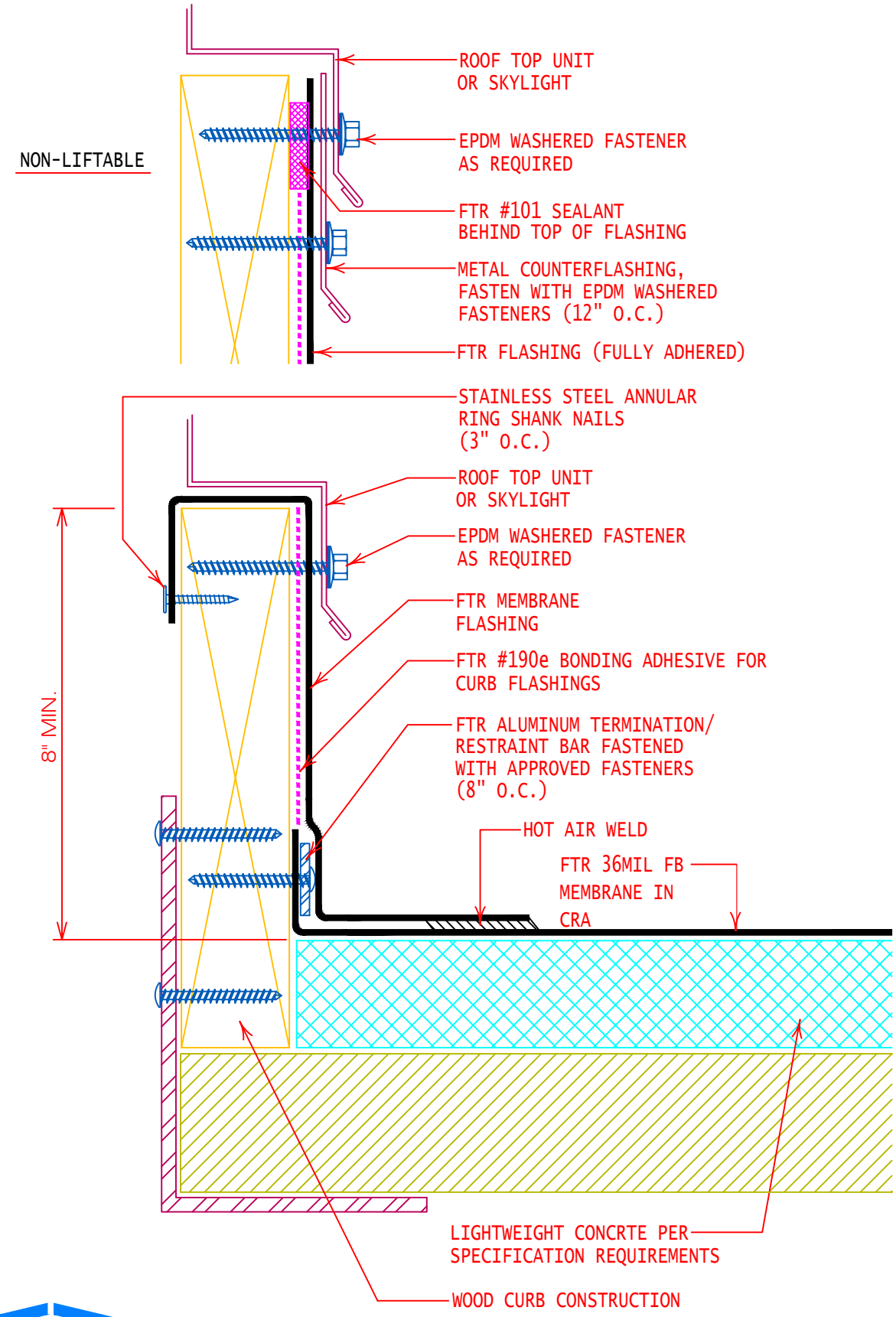

Fiberlite
Siplast Corporation
INTELLIGENT
ROOFING SOLUTIONS

GENERAL REFERENCE:
"FTR GS 01/21"

APPLICABLE SYSTEMS:
"FTR MA 01/21"
"FTR AD 01/21"
"FTR BA 01/21"

TYPICAL WOOD CURB FLASHING T-BAR RESTRAINT

REVISES DETAIL	ISSUE DATE	DRAWING NUMBER
ALL PREVIOUS	10-9-26	FTR-DP1a

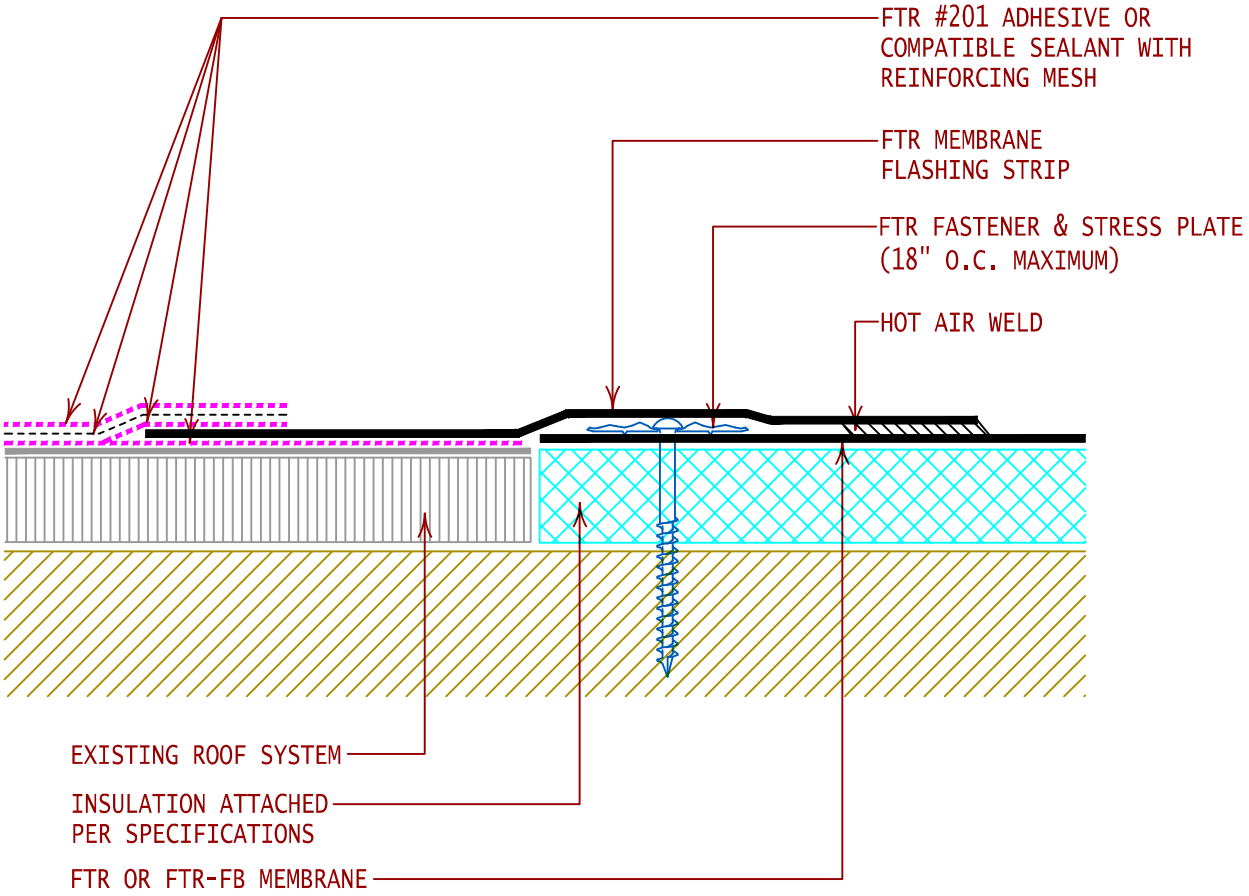

Fiberlite Seaman Corporation
INTELLIGENT ROOFING SOLUTIONS

GENERAL REFERENCE:
"FTR GS 02/13"

APPLICABLE SYSTEMS:
"FTR MA 02/13"
"FTR AD 02/13"
"FTR BA 02/13"

TEMPORARY "Over Night Seal" TO EXISTING ROOF SYSTEM

REVISES DETAIL	ISSUE DATE	DRAWING NUMBER
ALL PREVIOUS	02-10-14	FTR-DT4

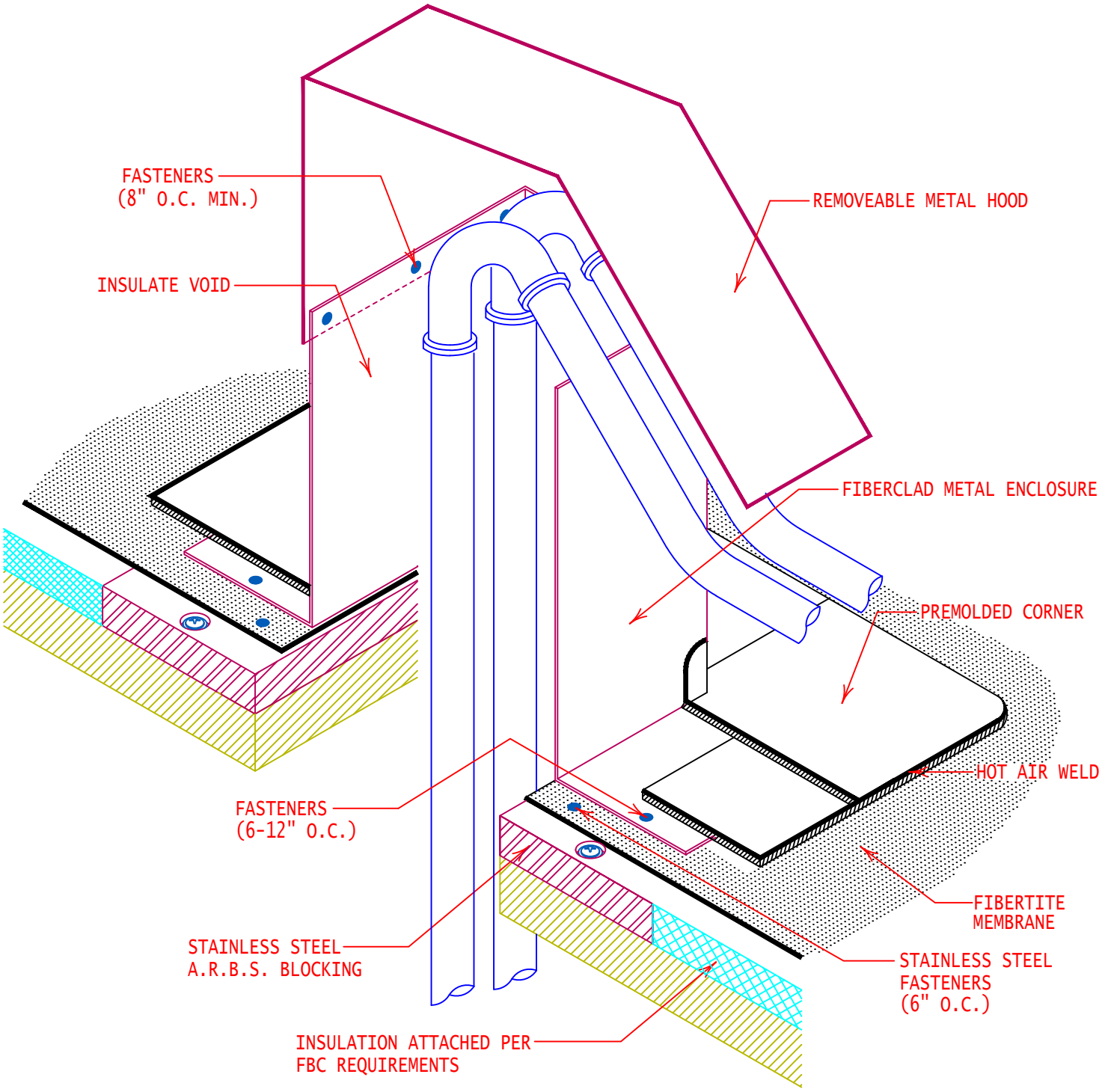

Fiberlite
Seaman Corporation

GENERAL REFERENCE:
"FTR GS 01/21"

APPLICABLE SYSTEMS:
"FTR MA 01/21"
"FTR AD 01/21"

PIPE PENETRATION - METAL HOOD FLASHING

REVISES DETAIL	ISSUE DATE	DRAWING NUMBER
ALL PREVIOUS	6-30-25	FTR-DP13i

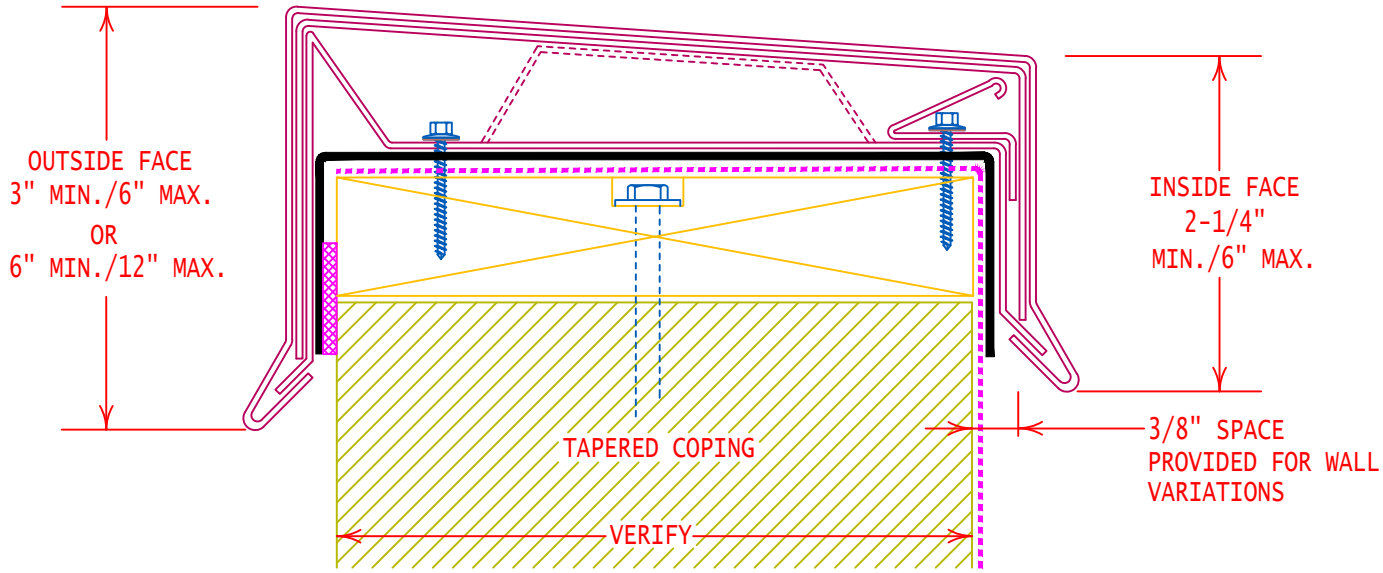

Fiberlite
Seaman Corporation

GENERAL REFERENCE: *"FTR GS 01/21"*	WALL WITH METAL CAP FLASHING
APPLICABLE SYSTEMS: *"FTR MA 01/21"* *"FTR AD 01/21"* *"FTR BA 01/21"*	

REVISES DETAIL	ISSUE DATE	DRAWING NUMBER
ALL PREVIOUS	10-11-26	FTR-DW5a

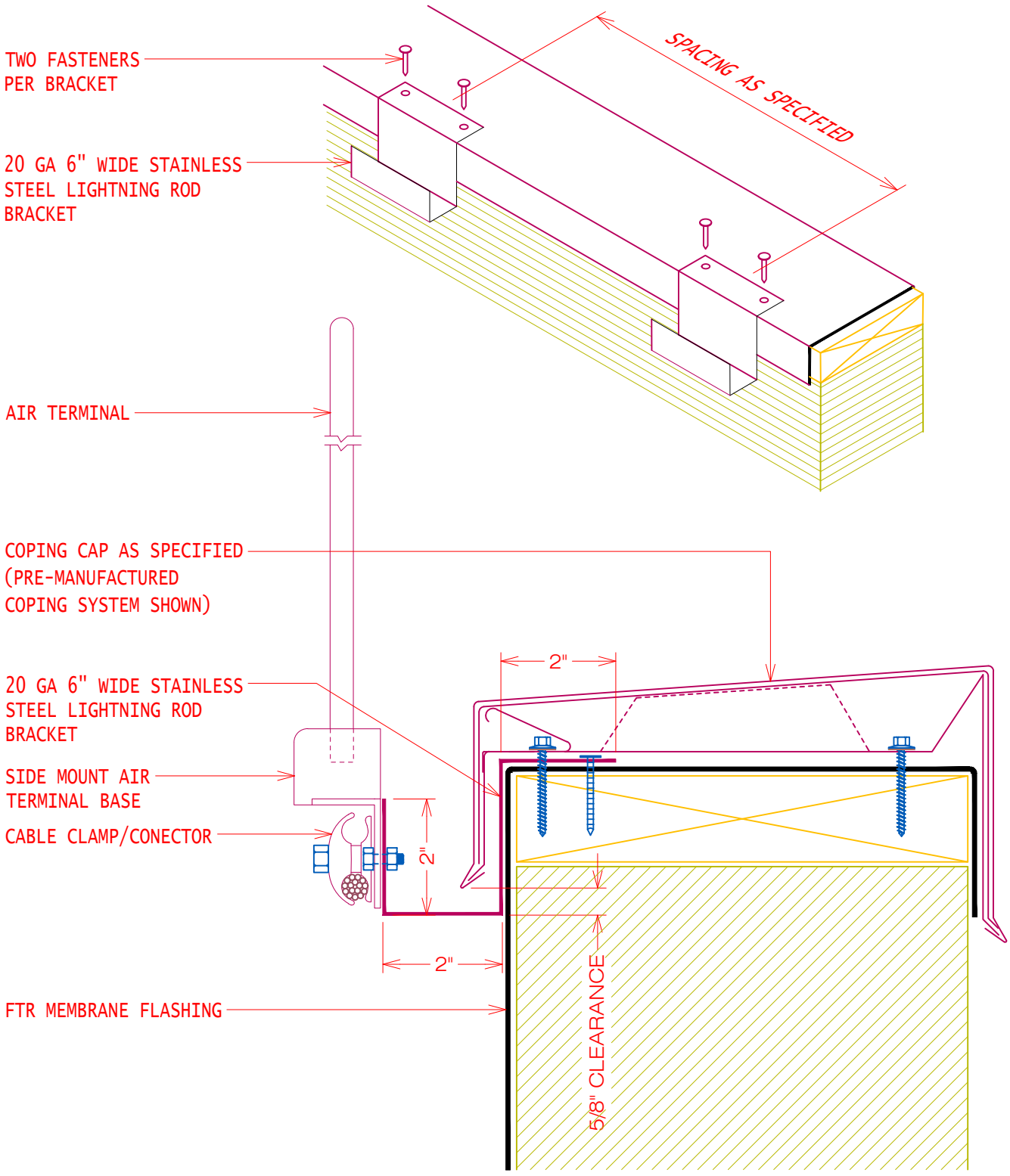

Fiberlite
Seaman Corporation

GENERAL REFERENCE:
"FTR GS 01/21"

APPLICABLE SYSTEMS:
"FTR MA 01/21"
"FTR AD 01/21"
"FTR BA 01/21"

LIGHTNING ROD BRACKET STYLE 2

REVISES DETAIL	ISSUE DATE	DRAWING NUMBER
ALL PREVIOUS	10-11-26	FTR-LRB3

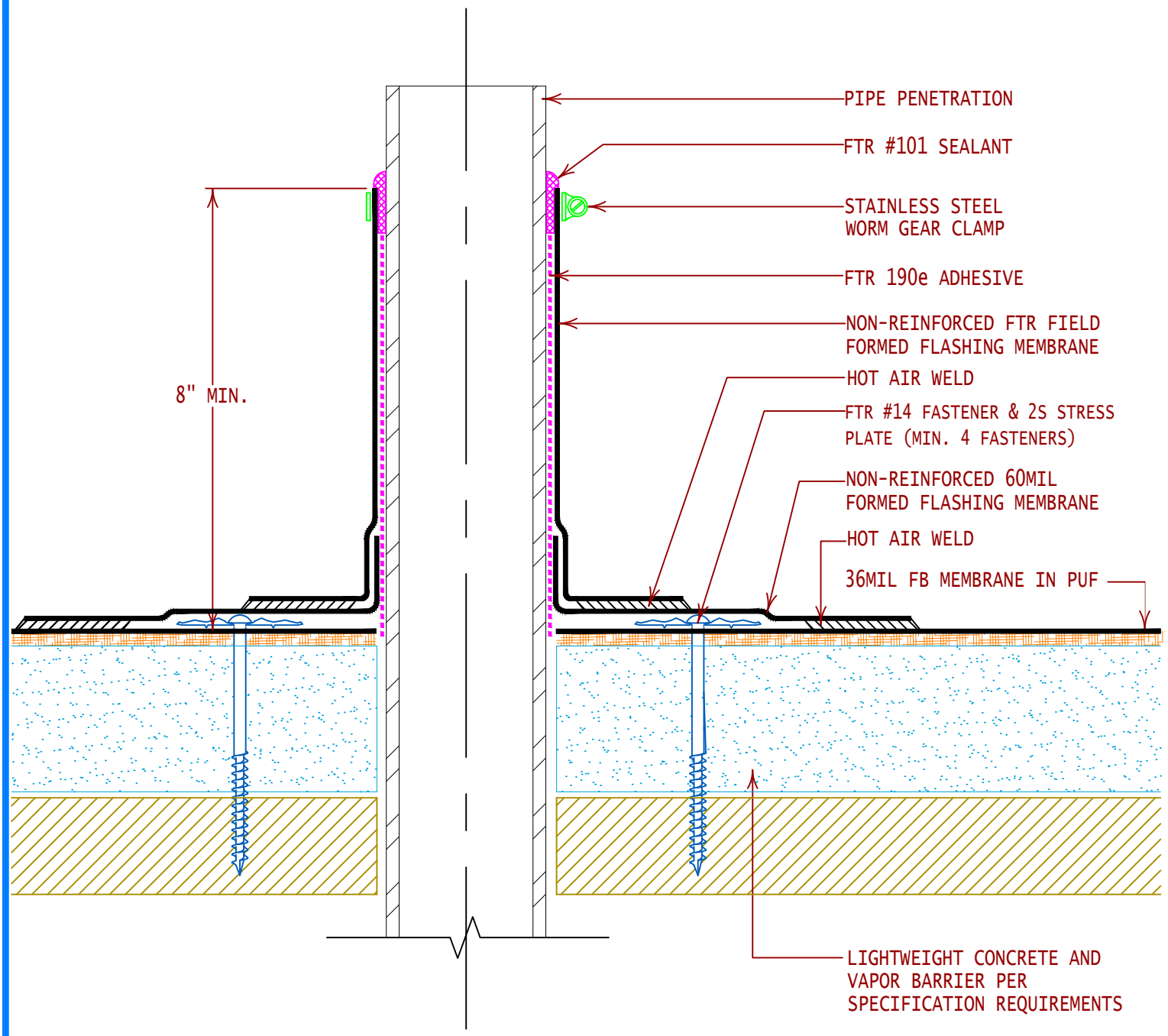

Fiberlite
Seaman Corporation
INTELLIGENT
ROOFING SOLUTIONS

GENERAL REFERENCE:
"FTR GS08-17"

APPLICABLE SYSTEMS:
"FTR AD08-17"

FIELD FABRICATED PIPE FLASHING
LIGHTWEIGHT CONCRETE

REVISES DETAIL	ISSUE DATE	DRAWING NUMBER
ALL PREVIOUS	10-9-26	FTR-LWFPF

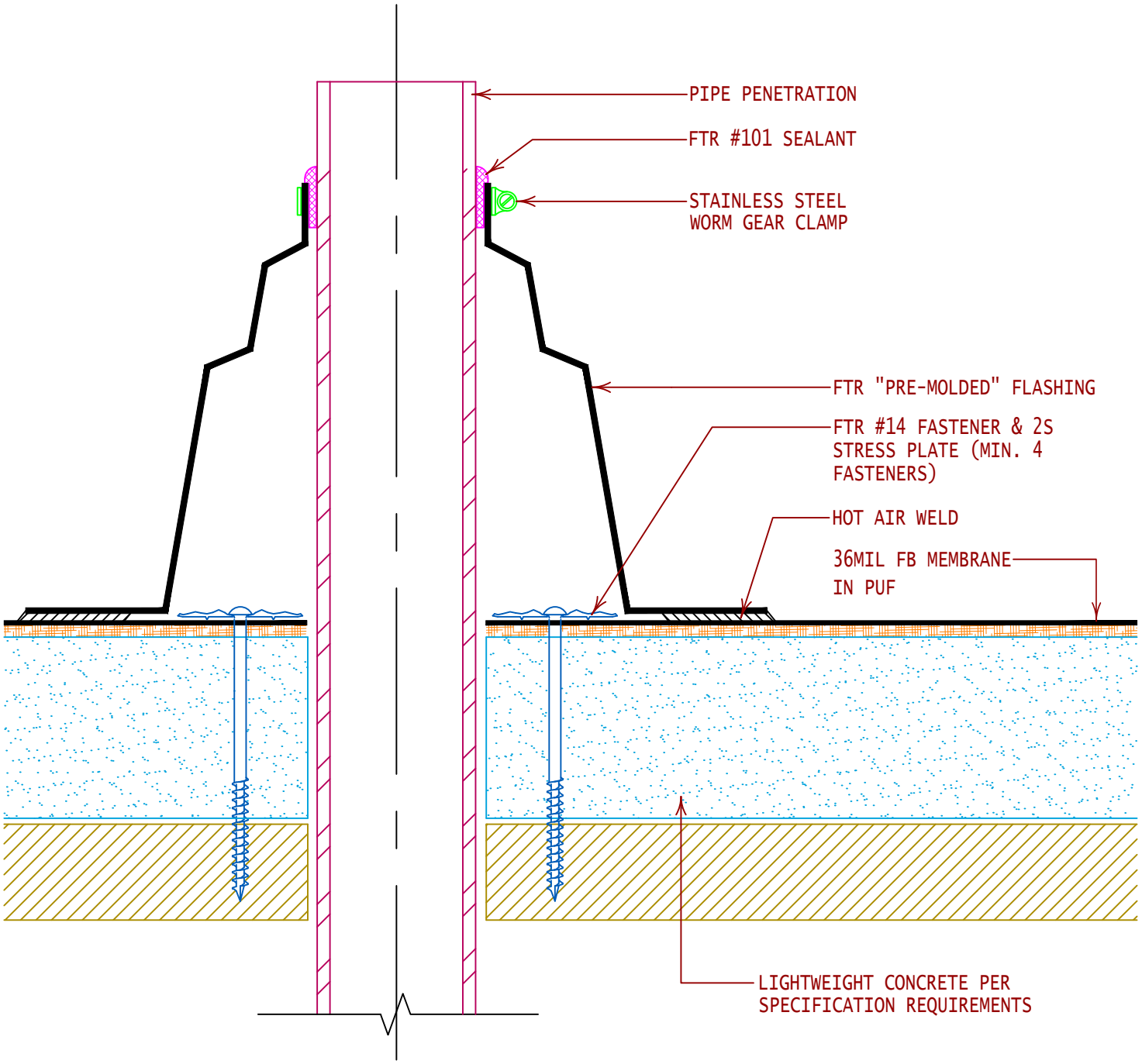

Fiberlite
Seaman Corporation
INTELLIGENT
ROOFING SOLUTIONS

GENERAL REFERENCE:
"FTR GS08-17"

APPLICABLE SYSTEMS:
"FTR AD08-17"

PRE-MOLDED PIPE FLASHING
LIGHTWEIGHT CONCRETE

REVISES DETAIL	ISSUE DATE	DRAWING NUMBER
ALL PREVIOUS	10-09-26	FTR-LWPP

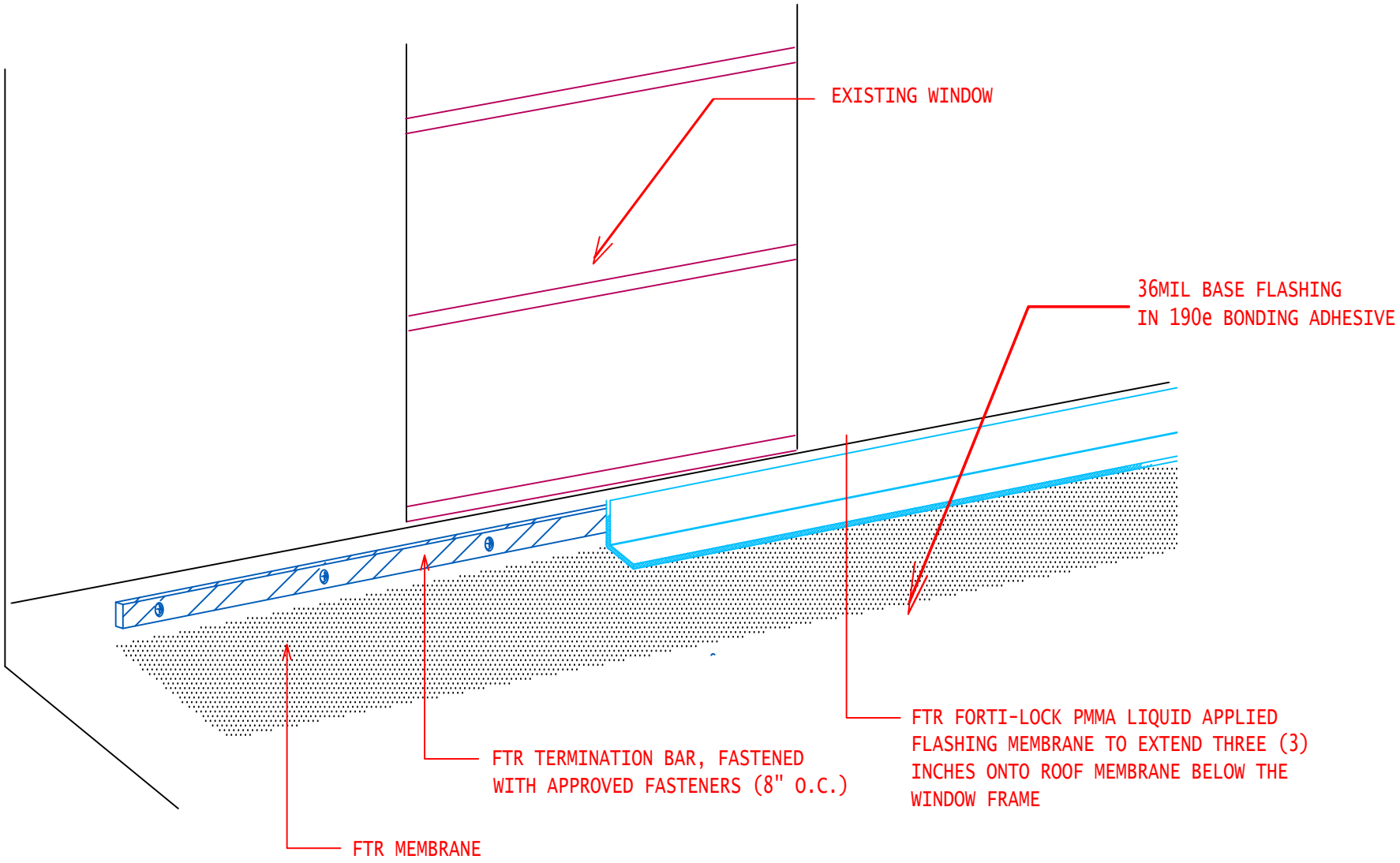

Fiberlite
Seaman Corporation

GENERAL REFERENCE:
"FTR GS 01/21"

APPLICABLE SYSTEMS:
"FTR MA 01/21"
"FTR AD 01/21"

BHIP WINDOW FLASING WITH FORTI-LOCK PMMA

REVISES DETAIL	ISSUE DATE	DRAWING NUMBER
ALL PREVIOUS	12-30-25	FTR-LVFF

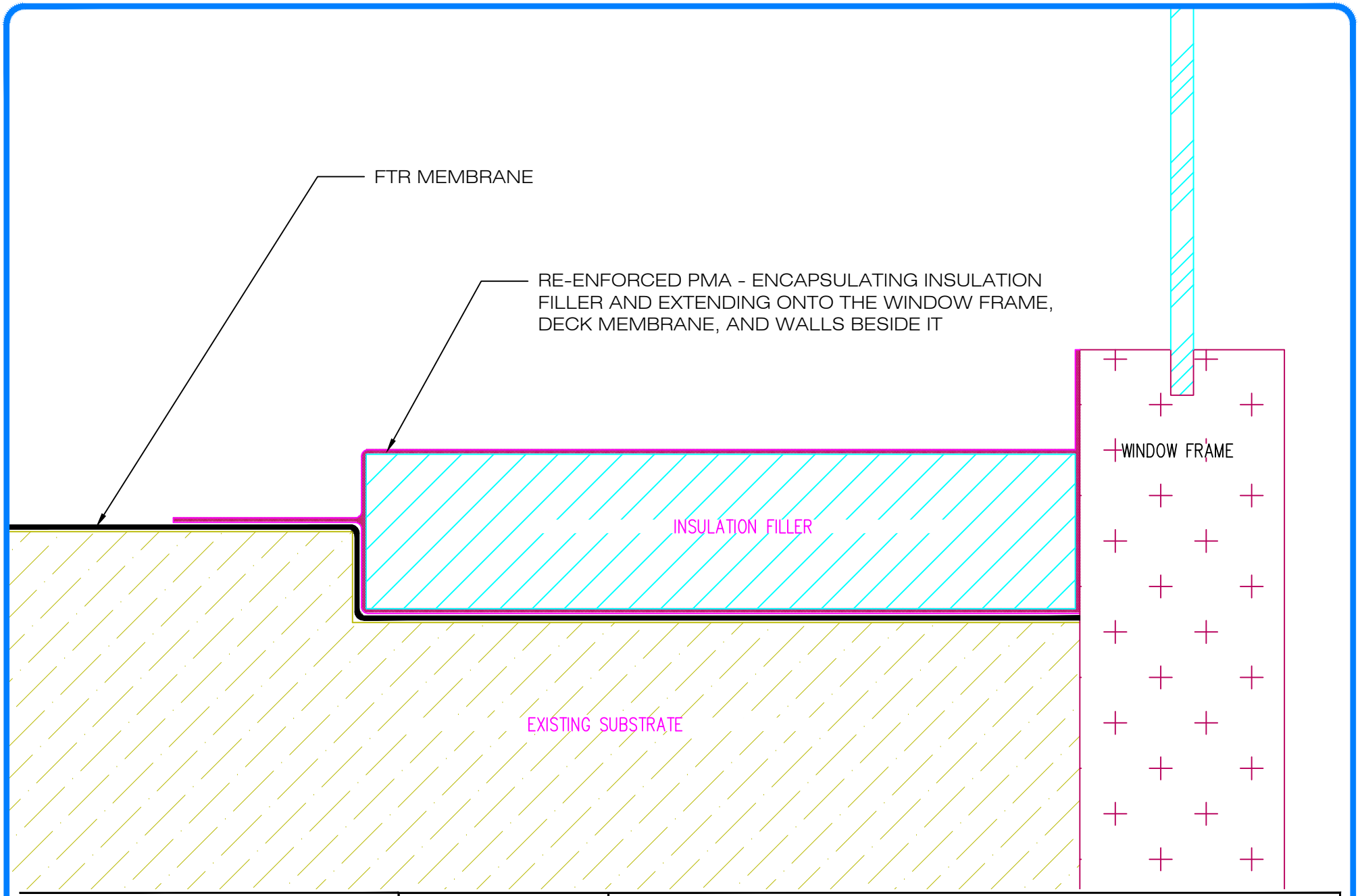

FiberTite® ROOF SYSTEMS

GENERAL REFERENCE	SCALE N.T.S.		
APPLICABLE SYSTEMS "FTR MA 01/21" "FTR AD 01/21" "FTR BA 01/21"	SCALE N.T.S.	CATEGORY WALL FLASHING	ISSUE DATE 10-14-2026	DRAWING NUMBER N/A

Product Data Sheets

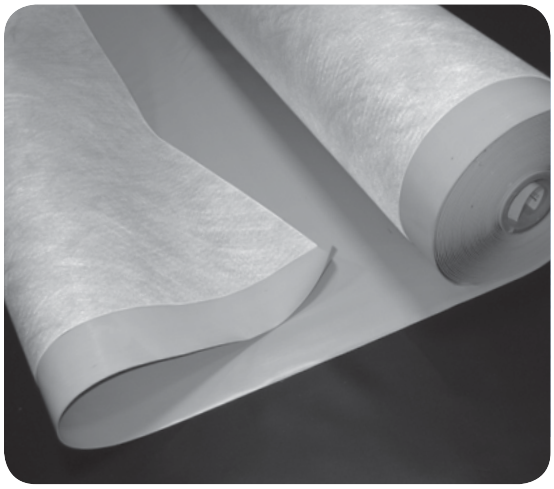

36 mil FiberTite-FB

Product Data

Seaman Corporation's 36 mil FiberTite-FB "fleece back" membrane features an 18 x 19 / 840 x 1,000 denier weft reinforced polyester knit fabric, coated with a proprietary compound, utilizing DuPont's™ Elvaloy® Ketone Ethylene Ester (KEE) as the principle polymer in the hybrid vinyl alloy coating.

DESCRIPTION

36 mil FiberTite-FB "fleece back" is a 30-oz sq. yd/nominal 36-mil (0.9 mm) thick membrane. In addition to exceeding the ASTM D 6754-15 Standard Specification for Ketone Ethylene Based Sheet Roofing's minimum standards, 36 mil FiberTite-FB meets or exceeds the physical properties and performance characteristics of most competitive 50-mil membranes.

The 36 mil FiberTite-FB membrane incorporates a 4-oz per sq. yd non-woven polyester felt, heat bonded to the back side of the membrane with a 3-in selvedge edge for field welding. 36 mil FiberTite-FB is manufactured in conventional 72-in by 80-ft roll goods.

Seaman Corporation is vertically integrated, which allows complete control over the manufacturing process from the selection of the yarns, to the engineering, knitting and weaving of the base fabrics to the final coating process. Today, FiberTite Roofing Membranes are the result of Seaman Corporation's 60 years of applied fabric engineering and coating technology.

All FiberTite Roofing Membranes are constructed using high tenacity/heavy weight yarns to create a base fabric reinforcement to impart superior puncture, tensile and tear resistance properties. The base polyester fabrics are primed with a unique and proprietary adhesive coat that lays the foundation to physically bond the KEE coatings to the "fiber" to maximize seam strength and overall membrane performance.

36 mil FiberTite-FB is coated face and back with Seaman Corporation's original "KEE" formulation to provide superior hot air welding characteristics, extreme UV resistance, broad chemical resistance and long-term flexibility and reparability for the installed roofing membrane system. Additionally, 36 mil FiberTite-FB exhibits superior tear, puncture, fungus, algae and flame resistance that make FiberTite Roofing Systems some of the most sustainable roofing systems available.

PHYSICAL PROPERTIES

ASTM D6754-15	Minimum Requirements	36 mil-FB Typical
Thickness, mm (in.) *ASTM D 751*	0.81 (0.032)	.91 (0.036 nom.)
Thickness over Fiber, mm (in) *Optical method (inches)*	0.18 (0.007)	.23 (0.009)
Breaking Strength, N (lbf) *ASTM D 751 proc. B - strip*	1499 (338)	1557 (350)
Elongation at Break, % *ASTM D 751 - strip*	18	18
Tear Strength, N (lbf) *ASTM D 751 Proc. B. Tongue Tear*	338 (76)	445 (100)
Linear Dimensional Change *ASTM D 1204 max (%)*	1.3	0.63
Fabric Adhesion, N/m (lbf/in) *ASTM D 751*	3330 (19)	no peel
Retention of Properties after Heat Aging *ASTM D 3045 - 176°f/56 days* Breaking Strength, strip, % original Elongation at Break, strip, % original	 90 90	 90 90
Low Temperature Bend after Heat Aging	-30	-30
Low Temperature Bend *ASTM D 2136 (°f)*	-30	-30
Change in Weight after Exposure in Water *D 471 158°f, 166 h, one side only, max. (%)*	0.0, +6.0	0.0, +3.7
Factory Seam Strength, N (lbf) *ASTM D 751 Grab Method*	1955 (440)	> Fabric Break
Hydrostatic Resistance, Mpa (psi) *ASTM D751*	4.1 (590)	4.8 (700)
Static Puncture Resistance *ASTM D 5602 (99 lbf)*	pass	pass
Dynamic Puncture Resistance (J) *ASTM D 5635*	10	20

FiberTite Seaman Corporation
INTELLIGENT ROOFING SOLUTIONS

For more information on FiberTite Systems and accessories please call:
Seaman Corporation (800) 927-8578
International (330) 262-1111
www.fibertite.com

FiberTite® is a registered trademark of Seaman Corporation.

FM APPROVED — Subject to the conditions of Approval for a roof covering when installed as described in the current edition of the Approval Guide.

c UL us — As to an external fire exposure only. See UL directory of products certified for Canada and UL roofing materials and systems directory 34KL, 48P0, 97P9.

DC196

ESR-1456

CFFA CHEMICAL FABRICS & FILM ASSOCIATION, INC.

These specifications are current as of the date of printing.
Revisions or additions may be issued periodically. For a listing, presentation, and download of the most recent data, visit:

www.fibertite.com/document-library/product-data-sheets

36 mil FiberTite-FB

Product Data

APPLICATION

36 mil FiberTite-FB Roofing Systems are installed by adhering the "fleece back" membrane in FTR-290 low VOC solvent borne adhesive, FTR-390 water borne asphalt emulsion, FTR-490 water borne elastomeric adhesive, FTR CR-20, or hot asphalt to a variety of pre-approved substrates.

For specific installation recommendations and requirements, please consult the most current versions of Seaman Corporation's Guide Specifications for the Installation of FiberTite Roofing Systems.

PHYSICAL PROPERTIES (cont.)

ASTM D6754-15	Minimum Requirements	36 mil-FB Typical
Accelerated Weathering *Practice G 155 / xenon*	5000hr	>10000hr
cracking (7x magnification)	none	none
crazing (7x magnification)	none	none
Accelerated Weathering *Practice G 154 / UVA*	5000hr	>10000hr
cracking (7x magnification)	none	none
crazing (7x magnification)	none	none
Fungi Resistance *Practice G 21, 28 days* Sustained Growth / Discoloration	no growth / none	no growth / none
Abrasion Test, cycles *D 3389 H-18 wheel / 1,000 g load*	1,500	1,500
Additional Physical Properties		
Tensile Strength (psi) *ASTM D882*	8500	
Breaking Strength (lbs) *ASTM D751, Grab Method*	450	
Puncture Resistance (lbs) *ASTM D751, Bursting Strength*	350	
Water Vapor Transmission *ASTM E96 proc. A (gm/m2/24hrs)*	1.3	
Shore A Hardness *ASTM D2240*	87	
Flame Resistance *MIL-C-20696C / Type II Class 2*	pass	
Oil Resistance, MIL-C 20696C *No swelling, cracking or leaking*	none	
Hydrocarbon Resistance, MIL-C-20696C *No swelling, cracking or leaking*	none	
High Temperature Dead Load *ASTM D751 (50 lbs, 160°F, 4 hrs)*	pass	

Energy Attributes	DC196 Off White	DC6 White	DC691 CR Gray	DC667 CR Tan
Initial Solar Reflectance *ASTM C1549*	0.83	0.87	0.69	0.72
Solar Reflectance (3 yr aged) *ASTM C1549*	0.66	0.71	*.61*	*.63*
Initial Thermal Emittance *ASTM C1371*	0.85	0.85	0.89	0.88
Thermal Emittance (3 yr aged) *ASTM C1371*	0.74	0.84	*.89*	*.89*
Solar Reflective Index (SRI) *ASTM E1980*	104	110	84	88
Solar Reflective Index (SRI) (3 yr aged) *ASTM E1980*	76	86	*73*	*76*
Energy Star	YES	YES	YES	YES
LEED v4 - Heat Island Reduction *SS Credit*	1 Credit	1 Credit	1 Credit	1 Credit

FiberTite® Seaman Corporation

INTELLIGENT ROOFING SOLUTIONS

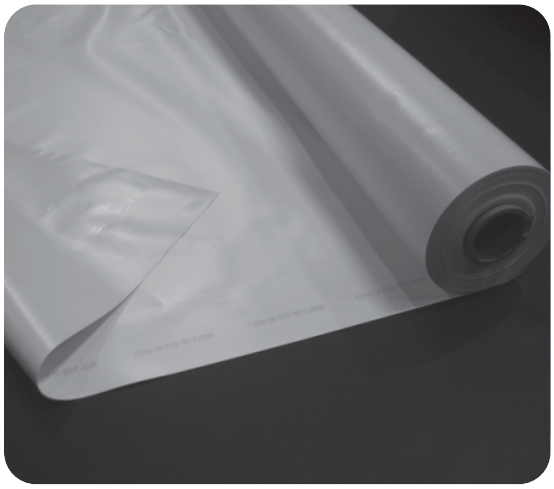

36 mil FiberTite

Product Data

Seaman Corporation's 36 mil FiberTite membrane was introduced in 1979. Then, as now, the membrane features an 18 x 19 / 840 x 1,000 denier weft reinforced polyester knit fabric, coated with a proprietary compound, utilizing DuPont's™ Elvaloy® Ketone Ethylene Ester (KEE) as the principle polymer in the hybrid vinyl alloy coating.

DESCRIPTION

36 mil FiberTite is a 30-oz sq. yd/nominal 36-mil (0.9 mm) thick membrane and was used as the benchmark membrane for the development of ASTM D 6754-15 Standard Specification for Ketone Ethylene Ester (KEE) Based Sheet Roofing. In addition to exceeding the ASTM minimum standards, 36 mil FiberTite meets or exceeds the physical properties and performance characteristics of most competitive 60-mil membranes.

Seaman Corporation is vertically integrated, which allows complete control over the manufacturing process from the selection of the yarns, to the engineering, knitting and weaving of the base fabrics to the final coating process. Today, FiberTite Roofing Membranes are the result of Seaman Corporation's 60 years of applied fabric engineering and coating technology.

All FiberTite Roofing Membranes are constructed using high tenacity/heavy weight yarns to create a base fabric reinforcement to impart superior puncture, tensile and tear resistance properties. The base polyester fabrics are primed with a unique and proprietary adhesive coat that lays the foundation to physically bond the KEE coatings to the "fiber" to maximize seam strength and overall membrane performance.

36 mil FiberTite is coated face and back with Seaman Corporation's original "KEE" formulation to provide superior hot air welding characteristics, extreme UV resistance, broad chemical resistance and long-term flexibility and reparability for the installed roofing membrane system. Additionally, 36 mil FiberTite exhibits superior tear, puncture, fungus, algae and flame resistance that make FiberTite Roofing Systems some of the most sustainable roofing systems available.

36 mil FiberTite membrane is manufactured in conventional 74-in and 100-in wide by 120-ft roll goods. 36 mil FiberTite is also available in customized prefabricated roll widths and lengths that incorporate integrated fastening tabs, sealing tabs and also "no-tab" rolls of membrane up to 20-ft wide by 100-ft in length. Field seaming of the membrane is accomplished by fusing the thermoplastic membrane with conventional hot air welding equipment.

PHYSICAL PROPERTIES

ASTM D6754-15	Minimum Requirements	36 mil Typical
Thickness, mm (in.) *ASTM D 751*	0.81 (0.032)	.91 (0.036 nom.)
Thickness over Fiber, mm (in) *Optical method (inches)*	0.18 (0.007)	.23 (0.009)
Breaking Strength, N (lbf) *ASTM D 751 proc. B - strip*	1499 (338)	1557 (350)
Elongation at Break, % *ASTM D 751 - strip*	18	18
Tear Strength, N (lbf) *ASTM D 751 Proc. B. Tongue Tear*	338 (76)	445 (100)
Linear Dimensional Change *ASTM D 1204 max (%)*	1.3	0.63
Fabric Adhesion, N/m (lbf/in) *ASTM D 751*	3330 (19)	no peel
Retention of Properties after Heat Aging *ASTM D 3045 - 176°f/56 days* Breaking Strength, strip, % original Elongation at Break, strip, % original	 90 90	 90 90
Low Temperature Bend after Heat Aging	-30	-30
Low Temperature Bend *ASTM D 2136 (°f)*	-30	-30
Change in Weight after Exposure in Water *D 471 158°f, 166 h, one side only, max. (%)*	0.0, +6.0	0.0, +3.7
Factory Seam Strength, N (lbf) *ASTM D 751 Grab Method*	1955 (440)	> Fabric Break
Hydrostatic Resistance, Mpa (psi) *ASTM D751*	4.1 (590)	4.8 (700)
Static Puncture Resistance *ASTM D 5602 (99 lbf)*	pass	pass
Dynamic Puncture Resistance (J) *ASTM D 5635*	10	20

FiberTite Seaman Corporation

For more information on FiberTite Systems and accessories please call:
Seaman Corporation (800) 927-8578
International (330) 262-1111
www.fibertite.com

FiberTite® is a registered trademark of Seaman Corporation.

FM APPROVED — Subject to the conditions of Approval for a roof covering when installed as described in the current edition of the Approval Guide.

CLASSIFIED cULus — As to an external fire exposure only. See UL directory of products certified for Canada and UL roofing materials and systems directory 34KL, 48P0, 97P9.

ES ESR-1456

CRRC CHARTER MEMBER

CFFA CHEMICAL FABRICS & FILM ASSOCIATION, INC.

BBA BRITISH BOARD OF AGREEMENT CERTIFICATE No 08/4508

MIAMI-DADE COUNTY APPROVED

SPRI SINGLE PLY ROOFING INDUSTRY

These specifications are current as of the date of printing.
Revisions or additions may be issued periodically. For a listing, presentation, and download of the most recent data, visit:

www.fibertite.com/document-library/product-data-sheets

36 mil FiberTite

Product Data

APPLICATION

36 mil FiberTite Roofing Systems carry extensive FM Global and Underwriters Laboratories approvals. 36 mil FiberTite Roofing Systems can be installed by mechanically fastening the membrane with FiberTite Magnum Fasteners and Stress Plates or adhering the membrane in FTR 190e bonding adhesive to pre-approved substrates. 36 mil FiberTite can also be installed in typical ballast configurations using conventional stone or paver ballast.

For specific installation recommendations and requirements, please consult the most current versions of Seaman Corporation's Guide Specifications for the Installation of FiberTite Roofing Systems.

PHYSICAL PROPERTIES (cont.)

ASTM D6754-15	Minimum Requirements	36 mil Typical
Accelerated Weathering *Practice G 155 / xenon*	5000hr	>10000hr
cracking (7x magnification)	none	none
crazing (7x magnification)	none	none
Accelerated Weathering *Practice G 154 / UVA*	5000hr	>10000hr
cracking (7x magnification)	none	none
crazing (7x magnification)	none	none
Fungi Resistance *Practice G 21, 28 days* Sustained Growth / Discoloration	no growth / none	no growth / none
Abrasion Test, cycles *D 3389 H-18 wheel / 1,000 g load*	1,500	1,500
Additional Physical Properties		
Tensile Strength (psi) *ASTM D882*	8500	
Breaking Strength (lbs) *ASTM D751, Grab Method*	450	
Puncture Resistance (lbs) *ASTM D751, Bursting Strength*	350	
Water Vapor Transmission *ASTM E96 proc. A (gm/m2/24hrs)*	1.3	
Shore A Hardness *ASTM D2240*	87	
Flame Resistance *MIL-C-20696C / Type II Class 2*	pass	
Oil Resistance, MIL-C 20696C *No swelling, cracking or leaking*	none	
Hydrocarbon Resistance, MIL-C-20696C *No swelling, cracking or leaking*	none	
High Temperature Dead Load *ASTM D751 (50 lbs, 160°F, 4 hrs)*	pass	

Energy Attributes	DC196 Off White	DC6 White	DC691 CR Gray	DC667 CR Tan
Initial Solar Reflectance *ASTM C1549*	0.83	0.87	0.69	0.72
Solar Reflectance (3 yr aged) *ASTM C1549*	0.66	0.71	*.61*	*.63*
Initial Thermal Emittance *ASTM C1371*	0.85	0.85	0.89	0.88
Thermal Emittance (3 yr aged) *ASTM C1371*	0.74	0.84	*.89*	*.89*
Solar Reflective Index (SRI) *ASTM E1980*	104	110	84	88
Solar Reflective Index (SRI) (3 yr aged) *ASTM E1980*	76	86	*73*	*76*
Energy Star	YES	YES	YES	YES
LEED v4 - Heat Island Reduction *SS Credit*	1 Credit	1 Credit	1 Credit	1 Credit

FiberTite® Seaman Corporation

INTELLIGENT ROOFING SOLUTIONS

ALSAN® RS LO PRIMER

100% Solid, Low-Odor Epoxy Used for Waterproofing



APPLICATIONS

ROOFS

PRODUCT DATA SHEET PD10353 - REV.220308

QUICK FACTS:

UNIT SIZE (kg)	AMBIENT TEMP (°F)	SUBSTRATE TEMP (°F)	POT LIFE (min)	RAIN PROOF (min)
5 Combined (18.3 L)	50-95 (10-35°C)	50-95 (10-35°C)	30 at 75°F (23°C)	2 at 75°F (23°C)

RAIN PROOF (min)	NEXT LAYER (min)	FULLY CURED (HOUR)	MATERIAL	USES
2 at 75°F (23°C)	3 at 75°F (23°C)	7 at 75°F (23°C)	Primer	Roofing & Waterproofing Applications

PACKAGING & PRODUCT NUMBERS:

- L-RSLOP - **ALSAN® 4 gal Base**
- L-t - **ALSAN® 1 gal Activator**

DESCRIPTION & FEATURES:

ALSAN® RS LO Primer is a 100% solids, low-odor epoxy used to promote adhesion to Metals (excluding copper), concrete, masonry, wood, and other substrates prior to application of ALSAN® RS roofing and ALSAN® TRAFIK RS waterproofing applications

STORAGE:

Always store closed containers in cool, ventilated and dry locations away from heat. Do not store in direct sunlight or in temperatures below 50°F (10°C) or above 77°F (25°C). Approximate shelf life is six months from date of shipment when properly stored sealed and unmixed.

APPLICATION:



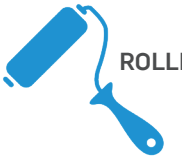

Apply **ALSAN® RS LO Primer** using a notched squeegee and roller at substrate and ambient temperatures as recommended preferably with falling temperature to reduce potential for "off-gassing. When primer will be left exposed for more than 24 hours, fully "blind" cover while wet with #1 kiln-dried quartz aggregate, and allow to cure then vacuum off excess loose aggregate. Primer should not be applied if temperatures will fall below 32°F (0°C) within 24-hours of application. Prior to application, refer to published specifications, guidelines and recommendations for complete application instructions. The applicator is responsible for ensuring conditions are appropriate to proceed with proper application methods.

ALSAN® RS LO Primer requires combining one container of **ALSAN® RS LO Primer** Base component A with one container of ALSAN® RS LO Activator component B available in prepackaged 5-gallon work packs. Thoroughly mix the entire container of ALSAN® RS LO Base component prior to use or pouring off when batch mixing. Combine ALSAN® RS LO Base component with ALSAN® RS LO Activator component at a ratio of 4:1 respectively; thoroughly mix using a slow speed electrical mixer for 2 – 3 minutes. Apply **ALSAN® RS LO Primer** using a notched squeegee and 3/8 in nap epoxy rated roller by spreading with the notched squeegee to the appropriate coverage rate and immediately back rolling with a 3/8 in nap epoxy rated roller at a right angle (90 degrees) to the direction of the squeegee application.

ALSAN® RS LO PRIMER

100% Solid, Low-Odor Epoxy Used for Waterproofing



PRODUCT DATA SHEET PD10353 - REV.220308

APPLICATIONS

ROOFS

TECHNICAL INFORMATION & TESTING:

APPROXIMATE COVERAGE RATES		
SUBSTRATE PROFILE	**MINIMUM TOTAL COVERAGE RATE** L/ft² (gal/m²)	**WET THICKNESS** mils (mm)
SMOOTH (CSP 3)	50 (20.37)	8 (0.05)

PHYSICAL PROPERTIES		
DESCRIPTION	**PROPERTY**	**STANDARD**
Solids - Weight, %	**56%** +/- 2%	ASTM D1644
Solids - Volume, %	**45%** +/- 2%	ASTM D2697
Color	Part A - Black Part B - Clear Combined - Black	-
Flash Point - A & B Mixed, °F (°C)	**>212** (100)	-
VOC, lb/gal (g/L)	<100	EPA Method 24

** Data is represented by average values, unless noted otherwise.*

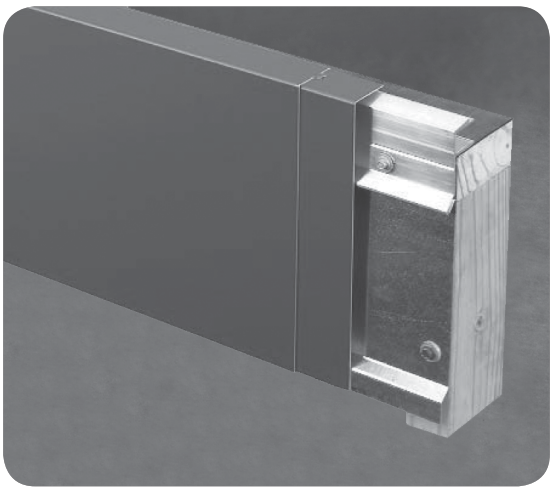

FiberTite Architectural Metal Edge Systems

Product Data

FiberTite offers a complete line of pre-engineered Architectural Metal edge flashing systems.

DESCRIPTION

FiberTite Architectural Metal Edge Systems are engineered and tested to withstand the harshest of conditions and are specifically designed to complement FiberTite Roofing Systems.

FiberTite AT Fascia consists of a heavy duty extruded aluminum anchor bar that secures the FiberTite membrane to the perimeter nailer. The anchor bar also functions as a receiver for the snap-on steel or aluminum metal fascia cover.

FiberTite 200 Fascia consists of a two piece 24-ga steel water dam and either aluminum or steel fascia combination.

FiberTite Architectural Metal Edge Systems are available in a variety of exterior finishes (natural mill, clear or anodized) and standard Kynar 500 colors.

Pre-finished and factory fabricated accessories including miters, spill outs for downspouts and scuppers are available for either the FiberTite AT or FiberTite 200 edge systems.

APPLICATION

Verify the edge systems profile and accuracy to fit the edge assembly prior to ordering/fabrication. FiberTite Architectural Metal Edge Systems shall be installed true and straight to substrates that are clean, dry and free of foreign matter.

For additional installation recommendations and requirements, please consult the most current version of FiberTite Guide Specifications for the Installation of FiberTite Roofing Systems and FiberTite Construction Details.

PHYSICAL PROPERTIES

FiberTite AT Fascia	
Anchor Bar	6063-T6 alloy aluminum
Fascia	24 ga. Steel, 0.040, 0.050 or 0.063 in aluminum
Lengths	12 ft typical anchor bar and fascia
FiberTite 200 Fascia	
Water Dam	24 ga. Steel
Fascia	24 ga. Steel, 0.040, 0.050 or 0.063 in aluminum
Lengths	12 ft typical anchor bar and fascia

FiberLite Seaman Corporation
INTELLIGENT ROOFING SOLUTIONS

For more information on FiberTite Systems and accessories please call:
Seaman Corporation (800) 927-8578
International (330) 262-1111
www.fibertite.com

FiberTite® is a registered trademark of Seaman Corporation.

FM APPROVED
Subject to the conditions of Approval for a roof covering when installed as described in the current edition of the Approval Guide.

CRRC CHARTER MEMBER
CFFA CHEMICAL FABRICS & FILM ASSOCIATION, INC.
SPRI SINGLE PLY ROOFING INDUSTRY

These specifications are current as of the date of printing.
Revisions or additions may be issued periodically. For a listing, presentation, and download of the most recent data, visit:

www.fibertite.com/document-library/product-data-sheets

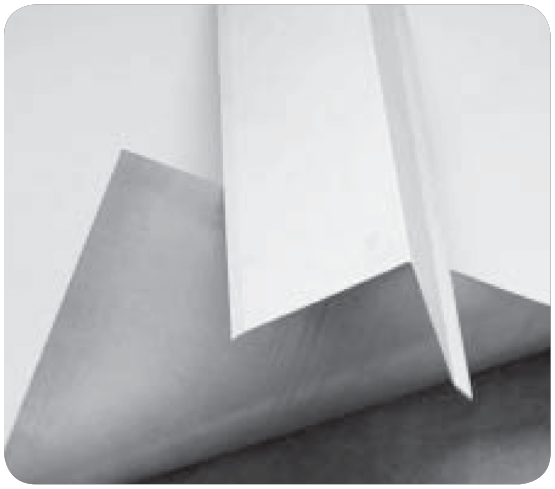

FiberClad Coated Metal

Product Data

FiberClad is a heat weldable, polymeric coated sheet metal flashing for use with all FiberTite Roofing Systems.

DESCRIPTION

The polymeric coating helps extend the monolithic nature of the membrane roofing system to the metal flashing profiles. In addition to providing a hot-air weldable surface to the metal flashing, the polymeric coating protects the steel or aluminum sheet metal from environmental elements and accents the aesthetics of the finished roof system.

FiberClad is sold only as flat sheet to allow the roofing contractor to customize individual metal profiles and is included in Seaman Corporation's Commercial Warranty for FiberTite Roofing Systems.

APPLICATION

FiberClad metal flashing is cut and formed to meet desired flashing profiles on standard (10-ft) sheet metal equipment. FiberClad metal flashing profiles are fastened in accordance with project requirements and current FiberTite Guide Specifications and Details. Metal flashing profiles are sealed using nominal 6-in wide strips of FiberTite membrane hot air welded to the metal profile and the membrane roof system and/or flashing.

PHYSICAL PROPERTIES

24 ga. Hot dipped G-90 Steel	
Film Thickness	.020 in (0.5 mm)
Sheet Dimensions	48-in x 120-in (1.2 m x 3.0 m)
**0.040 in thick 3003H14 Aluminum*	
Film Thickness	.020 in (0.5 mm)
Sheet Dimensions	47.5-in x 120-in (1.2 m x 3.0 m)
24 ga. 304 2B Stainless Steel	
Film Thickness	.020 in (0.5 mm)
Sheet Dimensions	48-in x 120-in (1.2 m x 3.0 m)

Available colors: DC196-off white, bronze, gray & white.
*Aluminum and Stainless Steel FiberClad available in DC196 off white only.

FiberTite Seaman Corporation
INTELLIGENT ROOFING SOLUTIONS

For more information on FiberTite Systems and accessories please call:
Seaman Corporation (800) 927-8578
International (330) 262-1111
www.fibertite.com

FiberTite® is a registered trademark of Seaman Corporation.

These specifications are current as of the date of issuance.
Revisions or additions may be issued periodically. For a listing, presentation, and download of the most recent data for other FiberTite products, visit:

www.fibertite.com/document-library/product-data-sheets

CRRC CHARTER MEMBER
CFFA CHEMICAL FABRICS & FILM ASSOCIATION, INC.
SPRI SINGLE PLY ROOFING INDUSTRY

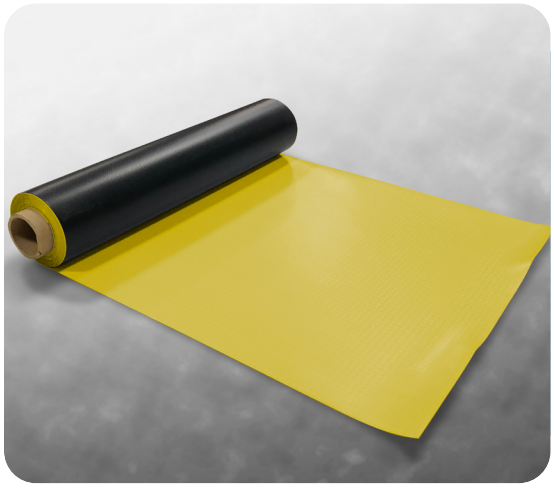

FiberTite KEE Tuff Trac™

Product Data

FiberTite walkway and protection materials are designed to improve slip resistance, promote positive traction and offer protection from potential damage caused by dropped tools or mishandled equipment.

DESCRIPTION

FiberTite KEE Tuff Trac is a high strength, textile-reinforced walkway material featuring the proprietary Seaman Corporation ELVALOY™ Ketone Ethylene Ester (KEE) formulation and embossed with a low profile diamond plate design in a high visibility yellow color.



Product Detail

APPLICATION

Walkway and protection materials are used to provide defined paths to facilitate common rooftop traffic and traffic involved in regular servicing, maintenance, and repairs. FiberTite Tuff Trac is designed to improve slip resistance, promote positive traction, and offer protection from potential damage caused by dropped tools or mishandled equipment.

Tuff Trac walkways are to be maintained in specific areas around roof access points (ladders, hatches, doorways, etc.), around mechanical equipment requiring periodic maintenance and as a walkway system on roof areas subject to frequent foot traffic.

Rolls of Tuff Trac walkway can easily be cut to various shapes or sizes to facilitate most applications. The material is also designed to be continuously hot-air welded directly to the FiberTite roofing membrane.

For additional recommendations and requirements, please consult the most current versions of FiberTite Guide Specifications for the Installation of FiberTite Roofing Systems.

PHYSICAL PROPERTIES

Property	Test Method	Value/Unit
Weight	ASTM D751	50 ± 2 oz/yd²
Thickness	ASTM D752	60 mil (nominal)
Roll Size	n/a	30 in x 100 feet
Dimensional Stability (%)	ASTM D1204	0.5% (max)
Puncture Resistance	ASTM D751	125 lb
Grab Tensile	ASTM D752	450 lb/450 lb

FiberTite® Seaman Corporation

For more information on FiberTite Systems and accessories please call:
Seaman Corporation (800) 927-8578
International (330) 262-1111
FiberTite.com

These specifications are current as of the date of printing. Revisions or additions may be issued periodically. For a listing, presentation, and download of the most recent data, visit:
www.FiberTite.com/document-library/product-data-sheets

FiberTite® is a registered trademark of Seaman Corporation.
ELVALOY™ is a trademark of The Dow Chemical Company ("Dow") or an affiliated company of Dow.



Flashing Accessories

Product Data

FiberTite pre-molded and sheet form non-reinforced accessories complement the flashing needs of FiberTite Roofing Systems.

DESCRIPTION

These flashing components are manufactured from Seaman Corporation's proprietary compound, utilizing DuPont's™ Elvaloy® KEE (Ketone Ethylene Ester) compound as the principle polymer.

Pre molded KEE pipe flashings are injection molded and designed to accommodate cylindrical penetrations from 1-in up to 6-in in diameter.

Pre-molded universal inside/outside corner flashings are injection molded and designed to accommodate 90° inside or outside wall, curb and other rectangular penetration corners.

The use of pre-molded pipe and corner flashings significantly improves installation consistency and reduces field labor.

60-mil, non-reinforced KEE membrane is used for roofing applications where the pre-molded components do not accommodate the penetration.

APPLICATION

Seaman Corporation's FiberTite accessory components are formed and/or sealed in place using conventional hot-air welding techniques. Consult the most current versions of FiberTite Guide Specifications for the Installation of FiberTite Roofing Systems and Installation Details for installation requirements, cautions and parameters.

PHYSICAL PROPERTIES

Pre-Molded Pipe Flashing	
Material	KEE
Thickness	0.060 in
Packaging	8 ea. per carton
Pre-Molded Inside/Outside Corner	
Material	KEE
Thickness	.060 in
Packaging	20 ea. per carton
Non-Reinforced Sheet	
Material	KEE
Thickness	.060 in
Packaging	4-ft x 24-ft rolls
T-Joint Covers	
Material	KEE
Thickness	.060 in
Size / Packaging	4-in x 4-in / 100 per box

*Colors: FiberTite non-reinforced accessory components are standard DC196 "off white," DC6/white, DC901/energy gray, and DC261/thermal tan.

FiberTite Seaman Corporation
INTELLIGENT ROOFING SOLUTIONS

For more information on FiberTite Systems and accessories please call:
Seaman Corporation (800) 927-8578
International (330) 262-1111
www.fibertite.com

FiberTite® is a registered trademark of Seaman Corporation.

CRRC COOL ROOF RATING COUNCIL CHARTER MEMBER
CFFA CHEMICAL FABRICS & FILM ASSOCIATION, INC.
SPRI SINGLE PLY ROOFING INDUSTRY

These specifications are current as of the date of printing. Revisions or additions may be issued periodically. For a listing, presentation, and download of the most recent data, visit:
www.FiberTite.com/document-library/product-data-sheets

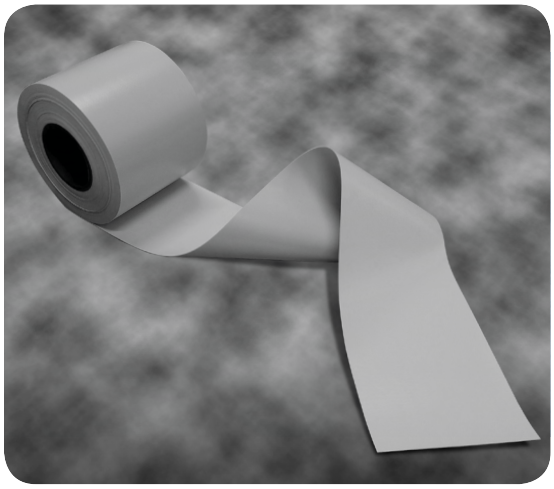

FiberTite Membrane Cover-Strips

Product Data

Seaman Corporation provides FiberTite Membrane Stripping for completion of Roof Edge Metal & Field Membrane installation details.

DESCRIPTION

FiberTite Stripping is constructed from FiberTite Membrane in widths of 6" & 8" x 100' long, in thicknesses of 36-mil, 45-mil-SM, and 50-mil-XT.

Available Colors:

- Off-white (Standard)
- White
- Thermal Tan
- Energy Gray

APPLICATION

FiberTite Membrane Stripping is used:

A. To seal the FiberTite Roof Membrane at the Roof Edge Metal by hot-air welding the FiberTite Stripping to roof-side flange of FiberClad Edge Metal, and hot-air welding the opposite edge of the FiberTite Stripping to the FiberTite Roof Membrane (see FiberTite Roof Edge Detail Drawings).

B. As a Coverstrip for exposed fastening plates and fasteners installed through the FiberTite Roof Membrane (see FiberTite Sheet Layout Detail Drawings).

For more information on FiberTite Systems and accessories please call:
Seaman Corporation (800) 927-8578
International (330) 262-1111
www.fibertite.com

FiberTite® is a registered trademark of Seaman Corporation.

INTELLIGENT ROOFING SOLUTIONS

These specifications are current as of the date of printing. Revisions or additions may be issued periodically. For a listing, presentation, and download of the most recent data, visit:
www.FiberTite.com/document-library/product-data-sheets



Forti-Lock™ Catalyst Powder

Product Data

Forti-Lock™ Catalyst Powder is a reactive agent used to induce curing of Forti-Lock™ Liquid Flashing products.

DESCRIPTION

Forti-Lock™ Catalyst Powder is a reactive agent based on dibenzoyl peroxide to induce curing of all Forti-Lock™ resin products during flashing application.

APPLICATION

Using a slow-speed (200 to 400 rpm) mechanical agitator, premix the entire container of resin for two minutes before each use, including prior to pouring off resin into a second container if batch mixing. Catalyze only the amount of material that can be applied with 10-15 minutes.

Add premeasured catalyst to the resin component, mix for 2-4 minutes based on temperature and apply to substrate. Refer to individual product data sheets for specific recommendations and requirements for the resin being used. The amount of catalyst added to Forti-Lock™ resins varies by type, summer (SG) or winter (WG) grade, quantity of resin to be mixed, and by the ambient temperature during mixing and installation.

Refer to specific Forti-Lock™ product data sheets and specifications for additional application information.

HANDLING AND STORAGE

Wear proper PPE (personal protective equipment) when handling this product and avoid contact with skin and eyes. Always store closed containers in a cool, ventilated and dry location away from heat sources. Do not store in direct sunlight or in temperatures below 32°F (0°C) or above 77°F (25°C). To avoid possible exothermic self-accelerating decomposition, do not store in direct sunlight or expose the product to temperatures exceeding 131°F (55°C). Store away from reducing agents, strong oxidizers, acids, alkalis and accelerators. Approximate shelf life is six months from date of manufacture when stored, sealed and unmixed.

PHYSICAL PROPERTIES

PROPERTY	MD
Packaging	0.1 kg (0.2 lb)
Packaging	25 kg (55 lb)
Shelf Life	approx. 6 months, if stored as directed

FORTI-LOCK CATALYST MIXING CHART

CATALYST REQUIRED	SUMMER GRADE (SG)				WINTER GRADE (WG)					
	4% Catalyst 50°F (10°C) to 68°F (20°C)		2% Catalyst 68°F (20°C) to 95°F (35°C)		6% Catalyst 23°F (-5°C) to 37°F (3°C)		4% Catalyst 37°F (3°C) to 50°F (10°C)		2% Catalyst 50°F (10°C) to 68°F (20°C)	
12 kg can	**5** 0.1 kg packets		**2.5** 0.1 kg packets		**7** 0.1 kg packets		**5** 0.1 kg packets		**2.5** 0.1 kg packets	
	TBSP	kg	TBSP	kg	TBSP	kg	TBSP	kg	TBSP	kg
1 kg	4	0.04	2	0.02	6	0.06	4	0.04	2	0.02
1 liter	5	0.05	2.5	0.024	7	0.07	5	0.05	2.5	0.024

WARNING:
MAY CAUSE FIRE IF STORED UNDER DIRECT SUN OR AT TEMPERATURES OVER 86 °F (30 °C).
WEAR PROPER PPE WHEN HANDLING THIS PRODUCT AND AVOID CONTACT WITH SKIN AND EYES.
SEE PRODUCT SDS FOR FULL DETAILS AND WARNINGS.

For more information on FiberTite Systems & Accessories please call:
Seaman Corporation (800) 927-8578 | International (330) 262-1111
www.FiberTite.com
FiberTite® is a registered trademark of Seaman Corporation.

These specifications are current as of the date of printing. Revisions or additions may be issued periodically. For a listing, presentation, and download of the most recent data, visit:
www.FiberTite.com/document-library/product-data-sheets



Forti-Lock™ Fleece

Product Data

Forti-Lock™ Fleece is a non-woven polyester reinforcement used in Forti-Lock™ Liquid Flashing applications.

DESCRIPTION

Forti-Lock™ Fleece is a proprietary non-woven polyester reinforcement used in Forti-Lock™ liquid flashing applications. Forti-Lock™ Fleece is available in a roll or in pre-cut detail kits for corners and small and large pipes.

Thickness: 25 mils (0.65 mm)

Weight: 0.36 oz/ft^2 (110 g/m^2)

APPLICATION

Mix and apply Forti-Lock™ products in strict accordance with published instructions.

Apply mixed resin to the prepared surface and roll out Forti-Lock™ Fleece into the liquid resin, making sure that the roll is unrolling smooth and without any wrinkles. Forti-Lock™ Fleece will begin to saturate into the liquid resin. Using a roller, wet the fleece with resin, applying light pressure. Roll the fleece with a nap roller to eliminate any air bubbles, wrinkles, etc.

Apply additional liquid resin mix on top of Forti-Lock™ Fleece until fully saturated and the layer of resin is fully and uniformly applied. Allow a 2 inch (5 cm) overlap at the side laps and 4 inch (10 cm) overlap at all flashing tie-ins and end laps.

STORAGE

Always store in a dry location protected against the elements. Store on end to avoid deforming rolls and creasing fabric.

PHYSICAL PROPERTIES

PROPERTY		Test Method	Result
Roll Weight, oz/ft^2 (g/m^2)		ASTM D3776	0.36 (110)
Thickness, mils (mm)		ASTM D1777	25 (0.65)
Tensile strength, lbf (N)	MD CD	ASTM D5034	53 (235) 59 (260)
Elongation, %	MD CD	ASTM D5034	70 80

ROLL FLEECE DIMENSIONS

ITEM #	FLEECE WIDTH, in	FLEECE LENGTH, ft	COVERAGE, ft^2
FORTI-LOCK-FLEECE-14	13.8	165	188

For more information on FiberTite Systems & Accessories please call:
Seaman Corporation (800) 927-8578 | International (330) 262-1111
www.FiberTite.com
FiberTite® is a registered trademark of Seaman Corporation.

These specifications are current as of the date of printing. Revisions or additions may be issued periodically. For a listing, presentation, and download of the most recent data, visit:
www.FiberTite.com/document-library/product-data-sheets



Forti-Lock™ Liquid Flashing

Product Data

Forti-Lock™ Liquid Flashing with KEE-Bond™ Technology is a high performance, rapid-setting, polymethyl methacrylate (PMMA) liquid resin for use in aberrant penetrations and low flashing terminations. Forti-Lock™ is available is Summer Grade (SG) and Winter grade (WG) formulations.

DESCRIPTION

Forti-Lock™ Liquid Flashing is a high performance, rapid-setting, polymethyl methacrylate (PMMA) liquid resin for use in flashing applications. Forti-Lock™ Liquid Flashing is catalyzed with Forti-Lock™ catalyst powder and combined with Forti-Lock™ Fleece to form a flexible, monolithic, reinforced membrane.

Available Colors:	White or Gray	
	Summer Grade (SG)	Winter Grade (WG)
Unit size:	26.4 lb / 2.53 gal (12 kg / 9.8 L)	26.4 lb / 2.50 gal (12 kg / 9.8 L)
Ambient Temperature:	50º to 95º F (10º to 35º C)	23º to 68º F (-5º to 20º C)
Substrate Temperature:	50º to 122º F (10º to 50º C)	23º to 68º F (-5º to 20º C)
Resin Temperature:	37º to 86º F (3º to 30º C)	37º to 86º F (3º to 30º C)
Curing Times @ 68ºF (20º C)	**Pot Life:**	15 to 20 minutes
	Rain Resistant:	30 to 45 minutes
	Next Layer:	60 to 90 minutes
	Fully Cured:	3 to 6 hours

APPLICATION



Forti-Lock™ Liquid Flashing is applied via brush or roller. Prior to application, refer to published specifications and approved details for complete application instructions. The applicator is responsible for ensuring conditions are appropriate to proceed with proper application methods.

STORAGE

Always store closed containers in cool, ventilated and dry locations away from heat and oxidizing agents. Do not store in direct sunlight or in temperatures below 32°F (0°C) or above 77°F (25°C). Approximate shelf life is twelve months from date of shipment when properly stored, sealed and unmixed.

FM APPROVED

CLASSIFIED C UL US

Fiberlite Seaman Corporation

For more information on FiberTite Systems & Accessories please call:

Seaman Corporation (800) 927-8578 | International (330) 262-1111

www.FiberTite.com

FiberTite® is a registered trademark of Seaman Corporation.

These specifications are current as of the date of printing. Revisions or additions may be issued periodically. For a listing, presentation, and download of the most recent data, visit:

www.FiberTite.com/document-library/product-data-sheets

PHYSICAL PROPERTIES

PROPERTY	Test Method	MD	XMD
Peak load @ 73.4°F (23°C) control, lbf/in (kN/m)	ASTM D5147	70 (12.3)	60 (10.5)
Elongation @ 73.4°F (23°C) control, %	ASTM D5147	55	70
Peak load @ 73.4°F (23°C) post heat aging, lbf/in (kN/m)	ASTM D5147	70 (12.3)	70 (12.3)
Elongation @ 73.4°F (23°C) post heat aging, %	ASTM D5147	50	50
Peak load @ 73.4°F (23°C) post acc. weathering, lbf/in (kN/m)	ASTM D5147	75 (13.1)	75 (13.1)
Elongation @ 73.4°F (23°C) post acc. weathering, %	ASTM D5147	55	55
Peak load @ 0°F (-18°C), lbf/in (kN/m)	ASTM D5147	130 (22.8)	110 (19.3)
Elongation @ 0°F (-18°C), %	ASTM D5147	60	85
Tear resistance, lbf (N)	ASTM D5147	80 (356)	70 (311)
Dimensional stability, %	ASTM D5147	0.1	0
Static puncture resistance, lbf (N)	ASTM D5602	Pass 56 (249)	
Shore A hardness, durometer	ASTM D2240	70	
Water absorption, %	ASTM D570 (@ 212°F)	0.8	
Water vapor permeance, perms	ASTM E96	0.2	
Low temperature flexibility, °F (°C)	ASTM D7264	Pass -33 (-36.1)	Pass -33 (-36.1)
Low temperature crack bridging	ASTM C1305	No cracks	
Self-ignition, °F (°C)	ASTM D1929	752 (400)	
Smoke density index	ASTM E84	105	
Rate of burning, in/min (m/hr)	ASTM D635	0.9 (1.4)	

APPROXIMATE COVERAGE RATES

SUBSTRATE PROFILE	12 kg UNIT ft² (m²)	MINIMUM TOTAL CONSUMPTION kg/ft² (kg/m²)	BASE COMPONENT CONSUMPTION kg/ft² (kg/m²)	TOP COAT CONSUMPTION kg/ft² (kg/m²)	TOTAL THICKNESS mils (mm)	BASE COAT mils (mm)	TOP COAT mils (mm)
Smooth	43 (4.0)	0.28 (3.0)	0.18 (2.0)	0.1 (1.0)	98 (2.5)	66 (1.6)	32 (0.8)
Typical	39 (3.6)	0.31 (3.3)	0.21 (2.3)		106 (2.7)	74 (1.9)	
Granulated	34 (3.2)	0.36 (3.8)	0.26 (2.8)		122 (3.1)	90 (2.3)	
Rough	34 (3.2)	0.40 (4.3)	0.30 (3.3)		140 (3.5)	108 (2.7)	

FORTI-LOCK CATALYST MIXING CHART

CATALYST REQUIRED	SUMMER GRADE (SG)				WINTER GRADE (WG)					
	4% Catalyst 50°F (10°C) to 68°F (20°C)		2% Catalyst 68°F (20°C) to 95°F (35°C)		6% Catalyst 23°F (-5°C) to 37°F (3°C)		4% Catalyst 37°F (3°C) to 50°F (10°C)		2% Catalyst 50°F (10°C) to 68°F (20°C)	
12 kg can	**5** 0.1 kg packets		**2.5** 0.1 kg packets		**7** 0.1 kg packets		**5** 0.1 kg packets		**2.5** 0.1 kg packets	
	TBSP	kg	TBSP	kg	TBSP	kg	TBSP	kg	TBSP	kg
1 kg	4	0.04	2	0.02	6	0.06	4	0.04	2	0.02
1L (~1.2 kg)	5	0.05	2.5	0.024	7	0.07	5	0.05	2.5	0.024

SPRI Single Ply Roofing Industry CFFA Chemical Fabrics & Film Association, Inc.

ADHESIVE



FTR-101

Product Data

FTR-101 is a general purpose, one component, elastic, moisture curing polyether sealant. It typically requires no priming to bond to many materials including FiberTite Membrane, metal, masonry, concrete, wood and fluoropolymer coatings.

DESCRIPTION

FTR 101 is designed for use with FiberTite Membranes in conjunction with terminations, drain seals and metal flashing. It exhibits excellent resistance to weather, stress, movement, water and many environmental chemicals while maintaining adhesion, cohesion and elasticity.

FiberTite FTR-101 is packaged in cases of twelve (12) standard 10 fl. oz. (.33 liter) cartridges. See FiberTite Guide Specification and FiberTite Material Safety Data Sheets (MSDS) for additional and specific application, design parameters and material precautions.

FTR 101 is an easy flowing, moisture cure polyether sealant, applied with an industrial caulking gun and produces a flexible joint/seal with good adhesion to a variety of construction surfaces including sheet metal, masonry, aluminum, brick, wood and concrete.

Surfaces to receive FTR-101 must be structurally sound, dry, clean, free of dirt, moisture, loose particles, oil, grease, asphalt, paint, wax, rust, waterproofing or curing and parting compounds. In cool weather, store cartridges at room temperatures for at least 24 hours before using.

STORAGE

Store original, unopened cartridges in a cool, dry area. Protect cartridges from water, heat and direct sunlight. Elevated temperatures will reduce shelf life. FTR 101 will not freeze.

SHELF LIFE

One year from date of manufacture when stored in normal environments. High temperature and high relative humidity may significantly reduce shelf life.

PRECAUTIONARY DATA

Caution: Avoid prolonged contact with skin. Uncured adhesive irritates eyes. In case of contact with eyes, immediately flush with water. Call a physician. Please refer to the MSDS for First Aid information. Most current MSDS can be found at www.fibertite.com. KEEP OUT OF REACH OF CHILDREN.

CLEAN UP

Wet sealant can be removed using a solvent such as alcohol. Cured FTR 101 can be removed by abrading or scraping the substrate.

PHYSICAL PROPERTIES

Color	White
Viscosity	Medium weight paste
Coverage	Appr. 20 lf per cartridge/3/8-in joint
VOC	< 19 g/l
Application	Apply by professional caulking gun/ tool sealant for maximum adhesion
Open / Cure Time	Skins within 1/2-hr / Full cure within 1-week
Shelf Life	1 year un-opened cartridge
Storage	Un-opened cartridge/away from heat and direct sunshine
Elongation	750 to 800%
Tensile Strength	150 psi
Shore A Hardness	20 +/- 3
Working Temp. Range	40°F to 90°F

FiberTite Seaman Corporation
INTELLIGENT ROOFING SOLUTIONS

For more information on FiberTite Systems and accessories please call:
Seaman Corporation (800) 927-8578
International (330) 262-1111
www.FiberTite.com
FiberTite® is a registered trademark of Seaman Corporation.

CRRC Cool Roof Rating Council Charter Member
CFFA Chemical Fabrics & Film Association, Inc.
SPRI Single Ply Roofing Industry

These specifications are current as of the date of printing. Revisions or additions may be issued periodically. For a listing, presentation, and download of the most recent data, visit:
www.FiberTite.com/document-library/product-data-sheets



FTR-190e

Product Data

FTR-190e is a low VOC solvent borne contact adhesive, for bonding non-fleece back FiberTite Membranes to pre-approved horizontal and vertical surfaces.

DESCRIPTION

FTR-190e is compliant with all air quality districts in the state of California and other regulated areas in the USA, making it the most environmentally friendly "solvent" borne adhesive available.

FTR-190e is a Nitrile/PVC polymeric adhesive. The adhesive is quick drying but has an extended "open-time" so proper planning, placement and care to insure appropriate adhesion, especially during periods of high humidity, is necessary.

FTR-190e is listed/approved for use with specific FiberTite Roofing Systems by FM-Global and Underwriters Laboratories.

APPLICATION

See FiberTite Guide Specification, and FiberTite Material Safety Data Sheets (MSDS) for additional and specific application, design parameters and material precautions.

Surfaces/substrate must be clean, dry and free of dirt, oil, grease or similar contaminates that could interfere with the bonding process.

Compatible substrates include: masonry, wood and metal for flashing applications as well as pre-approved polyisocyanurate insulation, approved gypsum based cover-boards and approved base sheets for horizontal roofing applications.

FTR-190e can be applied by either rolling or spraying at a coverage of approximately 50 ft^2 net per gallon (1.2 m^2/ liter), 45 ft^2 per 1/2 gallon to the substrate (1.1m^2/ 1/2 liter), 55 ft^2 per 1/2 gallon (1.3 m^2/1/2 liter) to the membrane. Actual coverage depends upon the porosity and smoothness of the surface to be bonded.

To ensure proper application and curing of the adhesive, the outside air temperature must be 40° F (4.4°C) and rising. Spray or roll a smooth, even coat of adhesive over the exposed, pre-positioned bottom of the FiberTite membrane and a mirrored symmetrical area of the substrate, insuring 100% coverage. Allow the solvents in the adhesive to dissipate to the point that the adhesive is "sticky" but not stringy to the touch. When ready, maneuver the adhesive coated portion of the FiberTite Membrane onto the adhesive coated substrate.

PHYSICAL PROPERTIES

Color	Amber
Viscosity	18,000 - 24,000 cps
Solid Weight	20% ± 2%
Coverage	40-50 ft^2/gal. (1.2 m^2) of bonded surface
V.O.C.	199 gm/L
Application	Brush, roller or spray
Open/Cure Time	10 - 30 min./complete cure in 28 days
Shelf Life	1 Year
Storage	Closed container/between 50° and 80°F
Wt. Gal.	7.4 lbs (0.9 kg/liter) shipped in 5 gal. pails
Working Temp. Range	40°F and rising/up to 90°F

FiberTite INTELLIGENT ROOFING SOLUTIONS

For more information on FiberTite Systems and accessories please call:
Seaman Corporation (800) 927-8578
International (330) 262-1111
www.fibertite.com

FiberTite® is a registered trademark of Seaman Corporation.

FM APPROVED — Subject to the conditions of Approval for a roof covering when installed as described in the current edition of the Approval Guide.

CRRC CHARTER MEMBER

CFFA CHEMICAL FABRICS & FILM ASSOCIATION, INC.

CLASSIFIED cULus — As to an external fire exposure only. See UL directory of products certified for Canada and UL roofing materials and systems directory 34KL, 48P0, 97P9.

ES ESR-1456

MIAMI-DADE COUNTY APPROVED

SPRI SINGLE PLY ROOFING INDUSTRY

These specifications are current as of the date of printing. Revisions or additions may be issued periodically. For a listing, presentation, and download of the most recent data, visit:
www.FiberTite.com/document-library/product-data-sheets



FiberTite Seam Cleaner

Product Data

FiberTite Seam Cleaner to be used to clean membrane seams prior to welding.

DESCRIPTION

FiberTite Seam Cleaner is to be used with clean white cotton cloths/rags to clean contamination from the seam areas of the membrane prior to welding. Wearing all personal protective equipment, including protective eye wear and gloves, pour the seam cleaner onto the clean white cotton rag and wipe the wet rag along the area to be cleaned.

DO NOT POUR THE SEAM CLEANER DIRECTLY ON THE MEMBRANE.

After cleaning, allow the seam area to completely dry before initiating the welding process. The cleaner is not to be used to clean areas of exposed membrane.

FiberTite Seam Cleaner is only necessary when the seam area is contaminated with dirt or other foreign material. For heavily soiled membrane, it is recommended that the area be cleaned first with a detergent, rinsed clean, dried and then cleaned with FiberTite Seam Cleaner prior to welding.

Store the FiberTite Seam Cleaner in a cool / dry location at temperatures between 40°F (4°C) and 80°F (27°C). Review the FiberTite Seam Cleaner Safety Data Sheet (SDS) and follow all the safety precautions contained therein.

PHYSICAL PROPERTIES

Composition	Colorless Liquid
Shelf Life	12 months
Vapor Density	Heavier than air
VOC Content	0 g/l per exemption The U.S. EPA, SCAQMD and other agencies consider the solvent in the FiberTite Seam Cleaner to be exempt and therefore the VOC content can be considered “0 g/l”.

Fiberlite Seaman Corporation
INTELLIGENT ROOFING SOLUTIONS

For more information on FiberTite Systems and accessories please call:
Seaman Corporation (800) 927-8578
International (330) 262-1111
www.fibertite.com

FiberTite® is a registered trademark of Seaman Corporation.

These specifications are current as of the date of printing.
Revisions or additions may be issued periodically. For a listing, presentation, and download of the most recent data, visit:

www.fibertite.com/document-library/product-data-sheets

CRRC COOL ROOF RATING COUNCIL CHARTER MEMBER

CFFA CHEMICAL FABRICS & FILM ASSOCIATION, INC.

SPRI SINGLE PLY ROOFING INDUSTRY

SEALANT



FTR-SLS

Product Data

FTR-SLS (self-leveling sealant) is an approved pitch pan sealant.

DESCRIPTION

FTR-SLS is a moisture curing, pourable, polyether sealant to fill pitch pans. The sealant is suitable for application in all climates. FTR-SLS is solvent free, contains no isocyanates and will not shrink upon curing. FTR-SLS has resilient elastomeric properties and excellent adhesion to most construction materials. FTR-SLS's low durometer accommodates greater movement in penetration seals than typical urethane sealants.

Refer to FiberTite Specifications and Details for proper pitch pan installation.

STORAGE

Store original, unopened containers in a cool, dry area. Protect unopened containers from water, heat and direct sunlight. Elevated temperatures will reduce FTR-SLS's shelf life.

Shelf Life:

One year from date of manufacturer when stored in normal environments. High temperature and high relative humidity may significantly reduce shelf life.

CURE TIME

FTR-SLS is a moisture cure sealant. Rate of cure is dependent on atmospheric conditions. Curing proceeds at a rate of ¼" a week at 70°F and 50% Relative Humidity. Lower temperature and humidity will inhibit the rate of cure. Higher temperature and humidity will accelerate rate of cure. Depths greater than 2" will cure through in 2 to 3 months.

CLEAN UP

Wet adhesive can be removed using a solvent such as alcohol. Cured FTR-SLS can be removed by abrading or scraping the substrate.

GREEN STANDARDS:

- LEED 2.2 for New Construction and Major Renovations: Low Emitting Materials (Section 4.1) 1 Point
- NAHB Model Green Home Building Guidelines: 5 Global Impact Points
- VOC Content: less than 19 grams / liter ASTM D2369 EPA Method 24 (tested at 240°F / 115°C)

These specifications are current as of the date of printing. Revisions or additions may be issued periodically. For a listing, presentation, and download of the most recent data, visit:
www.FiberTite.com/document-library/product-data-sheets

PHYSICAL PROPERTIES

Container	28-oz cartridge
Cartridges per Carton	12
Color	Gray

ADVANTAGES

- Solvent free, 100% solids will not shrink
- 20 minute skin over
- No outgassing on damp surfaces
- Good UV stability, will not suntan
- Paintable within 24 hours (See limitations)
- Self leveling, no special tools or mixing required
- Application at temperatures as low as 32°F (0°C)

LIMITATIONS:

Wet adhesive can be removed using a solvent such as alcohol. Cured FTR-SLS can be removed by abrading or scraping the substrate.

PRECAUTIONARY DATA

- Do not store in elevated temperatures
- Do not apply at temperatures below 30°F
- Do not use petroleum-based solvents such as mineral spirits or xylene for cleaning purposes
- Maintain FTR-SLS at room temperature before applying to ensure easy gunning and leveling

FiberTite Seaman Corporation
INTELLIGENT ROOFING SOLUTIONS

For more information on FiberTite Systems and accessories please call:
Seaman Corporation (800) 927-8578
International (330) 262-1111
www.fibertite.com

FiberTite® is a registered trademark of Seaman Corporation.

SPRI Single Ply Roofing Industry · ES ESR-1456 · CRRC Cool Roof Rating Council Charter Member · CFFA Chemical Fabrics & Film Association, Inc.



FTR SA Primer

Product Data

FTR SA Primer, a blend of synthetic polymers, solvents and resins, is FiberTite®'s Zero-VOC* vapor-barrier primer intended to enhance overall operational security in the areas of the roof that go unseen over time.

DESCRIPTION

FTR SA Primer is a single component, solvent based primer, made from a blend of synthetic polymer and adhesive enhancing resins designed to enhance the adhesion of VaporTite® Vapor Barrier on various substrates. FTR SA Primer is also eligible to contribute to LEED EQ Credits under LEED v4 (Schools/Healthcare only).

APPROVED SUBSTRATES

- Gypsum Cover Board
- Masonry
- Structural Concrete

LIMITATIONS

Do not apply to wet or damp surfaces. This includes primers. Allow solvent primers to completely dry before using the adhesive.

Do not apply when surface temperatures are below 32º F (0º C).

STORAGE

Maximum shelf life of 60 months in original sealed containers, stored in cool and ventilated area. Store pail in an upright position to prevent damage. Store in a clean dry location and cover as necessary to protect pails from environmental damage such as direct sunlight, extreme cold, heat, or moisture.

To ensure that FTR-SA Primer is applied at 70ºF (21ºC) during cold weather, primer should be stored in heated areas. Primer exposed to cold temperature on the roof should be provided with heated storage to ensure minimum application temperature is maintained.

SAFETY

Prior to working with this or any adhesive product consult the product label, Safety Data Sheet (SDS) and application instructions for necessary health and safety precautions.

CLEAN UP

Clean tools with petroleum solvent (e.g. mineral spirits). Apply without dilution or thinning.

PHYSICAL PROPERTIES

Packaging	5.0 gal (18.9L) pail
Containers per Pallet	36 pails
Color	Red
Viscosity, Brookfield	77° F (25° C): 300 - 600 cP
Solids by Weight	45%
VOC	*0 g/L (according to EPA rules) 240 g/L (according to SCAQMD rules)
Coverage+	100-140 ft²/gal (2.5-3.4 m²/L)
Application	Brush or Roller (thorough mixing is required)
Tack Time	30-90 minutes
Working Temp Range	40°F and rising
Shelf Life	Stored up to 60 months in original sealed container.

+ Coverage rates may vary when used over irregular surfaces.

These specifications are current as of the date of printing. Revisions or additions may be issued periodically. For a listing, presentation, and download of the most recent data, visit:
www.FiberTite.com/document-library/product-data-sheets

FiberTite Seaman Corporation

For more information on FiberTite Systems and accessories please call:
Seaman Corporation (800) 927-8578
International (330) 262-1111
www.FiberTite.com

FiberTite® is a registered trademark of Seaman Corporation.

FM APPROVED Subject to the conditions of Approval for a roof covering when installed as described in the current edition of the Approval Guide.

SPRI Single Ply Roofing Industry

CRRC Cool Roof Rating Council Charter Member

CFFA Chemical Fabrics & Film Association, Inc.



Polyset® Commercial Roof Adhesive

Product Data

Seaman Corporation supplies Polyset® Commercial Roof Adhesive (CRA) for installing Fleece Back Membrane in authorized FiberTite Roofing Systems. CRA is a two component elastomeric polyurethane designed to provide outstanding adhesive properties.

DESCRIPTION

Polyset CRA is used to adhere FiberTite Fleece Back membranes to a variety of approved substrates including polyisocyanurate insulation board, gypsum based coverboards, structural concrete and smooth bituminous roofs.

STORAGE & HANDLING

The "A" and "B" containers shall be stored between 45°F and 90°F. The shelf life, at these temperatures is 18 months from the date of production.

The product temperature prior to application shall be between 70°F and 85°F. The minimum ambient and surface temperature shall be 40°F and rising.

Temperatures outside the stated ranges may affect the bonding range, dispensability and overall performance of the product.

Cylinder Disposal: Disposable Cylinders shall be disposed of in accordance with local, state and federal regulations. Consult MSDS for more information.

APPLICATION

Substrate Preparation: All surfaces to be bonded must be clean, dry and free of any debris that would interfere with the proper application of the fleece back membrane.

CRA is a single surface adhesive. It is spray applied in a "Spatter Pattern" onto the roof, insulation or coverboard by dispensing the adhesive in a spray pattern similar to the action required when hand watering a flower bed. The spatter pattern should yield a heavily textured coating of approximately ¼" to ½" nominal thickness height on the peaks of the spatter, approximately 2500–3000 SQ FT of coverage per set.

The seams of the membrane and factory selvedge edge must be protected from overspray of the CRA. If overspray does contaminate the seam area(s), immediately clean the seam area with acetone while the CRA is still wet.

The bonding range for the CRA is approximately 1–10 minutes from the start of spraying and will vary according to ambient as well as substrate temperature. The amount of substrate area that the CRA is applied to ahead of the membrane should be monitored to prevent installing the membrane in dry adhesive. Care must be taken, particularly in high temperature environments, (90°F and above) to insure that the CRA has not dried or skinned over prior to embedding the fleece back membrane.

Refer to FiberTite Specifications for additional instruction.

FiberTite® Seaman Corporation

For more information on FiberTite Systems and accessories please call:
Seaman Corporation (800) 927-8578
International (330) 262-1111
FiberTite.com

FiberTite® is a registered trademark of Seaman Corporation.
Polyset® is a registered trademarks of ICP Adhesives and Sealants.

These specifications are current as of the date of printing.
Revisions or additions may be issued periodically.

For a listing, presentation, and download of the most recent data, visit:
www.fibertite.com/document–library/product–data–sheets

FM APPROVED

Subject to the conditions of Approval for a roof covering when installed as described in the current edition of the Approval Guide.



FiberTite Magnum Fasteners and Magnum-Plus Stress Plates

Product Data

FiberTite #15 Magnum Fasteners and Magnum-Plus Stress Plates are designed and engineered to provide enhanced load distribution and superior wind resistance for all mechanically attached FiberTite Roofing Systems.

DESCRIPTION

FiberTite Magnum Fasteners provide superior withdrawal and back-out resistance. FTR Magnum Fasteners incorporate a reduced diameter drill point for exceptional drilling, buttress threads for increased back-out torque and a high performance epoxy E-coat for superior corrosion resistance.

FiberTite Magnum-Plus Stress Plates are manufactured from 0.47 in. (1.19 mm thick) AZ50 Galvalume coated steel, are rectangular in shape; with three-quarter inch (1.9 cm) radial corners, a 0.25 in (0.635 cm) hole in the center of the plate, a raised reinforcement area to resist deflection and twelve (12) barbs to enhance wind resistance.

All FiberTite Magnum Series Fasteners and Stress Plates exceed FM Global (FMG 4470) requirements for corrosion resistance and are FMG Approved for Class 1 Mechanically Attached FiberTite Roofing Systems.

APPLICATION

FiberTite Magnum Fasteners and Magnum-Plus Stress Plates are engineered for all Mechanically Attached FiberTite Roofing Systems: including 100-in wide membranes.

For fastener and stress plate placement, installation instructions, and frequency and their correlation to specific approvals for wind resistance, consult the most current versions Seaman Corporation's Guide Specifications for the Installation of Mechanically Attached FiberTite Roofing Systems.

PHYSICAL PROPERTIES

Material	Case hardened carbon steel
Drive	#3 Phillips
Thread Diameter	0.263 in (0.67 cm)
Shank Diameter	0.204 in (0.52 cm)
Head Diameter	0.438 in (1.10 cm)
Point Type	Drill
Coating	E-Coat
Withdrawal Load*	725 lb+ (329 kg+)

*in 22 Ga. (0.91 thick) Grade 80 Steel

MINIMUM PENETRATION

Steel (thickness 26 ga (.019") through 18 ga. (.045")	0.75"
Plywood (min. thickness 0.75")	0.25"
Wood 2x (1 1/2" thick)	1.0"
Structural Concrete	1.0"

PULL OUT (LBS AVG.)

22 ga	706
20 ga	898
18 ga	1140
4000 psi concrete	728
3/4" plywood	703
2x dimensional lumber (1" penetration)	692
Non FM Approved Decks:	
26 ga	301
24 ga	453

FiberTite Seaman Corporation
INTELLIGENT ROOFING SOLUTIONS

For more information on FiberTite Systems and accessories please call:
Seaman Corporation (800) 927-8578
International (330) 262-1111
www.fibertite.com

FiberTite® is a registered trademark of Seaman Corporation.

FM APPROVED

Subject to the conditions of Approval for a roof covering when installed as described in the current edition of the Approval Guide.

These specifications are current as of the date of printing.
Revisions or additions may be issued periodically. For a listing, presentation, and download of the most recent data, visit:

www.fibertite.com/document-library/product-data-sheets

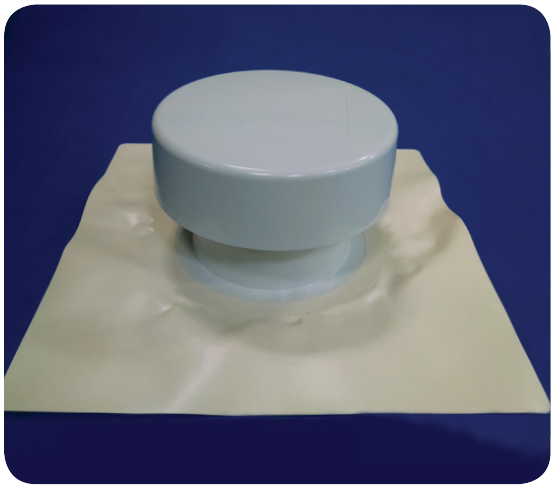

FiberTite Large Pre-Flashed One Way Roof Vent

Product Data

The FiberTite pre-flashed one way roof vent features a large capacity Marathon premium PVC vent with a pre-welded flashing for installation efficiency.

DESCRIPTION

Large one way roof vents are required on all FiberTite Roofing Systems installed over "non-vented" cellular lightweight insulating concrete roof decks. Typical installation shall utilize one vent per 1,500 square feet of roof area.

INSTALLATION:

1. Core the LWIC to the deck with a hole diameter no greater than 9-in.
2. Set the vent in a bead of FTR 101 sealant.
3. Weld the perimeter flashing sheet.

FEATURES

One Way Venting
Heavy Duty, UV stable PVC construction for durability
Exclusive one-way valve to prevent moisture from re-entering the roof system
Special insect resistant wire screen
Permanently attached vandal proof cap
No fastening required
Pre-welded FiberTite membrane flashing

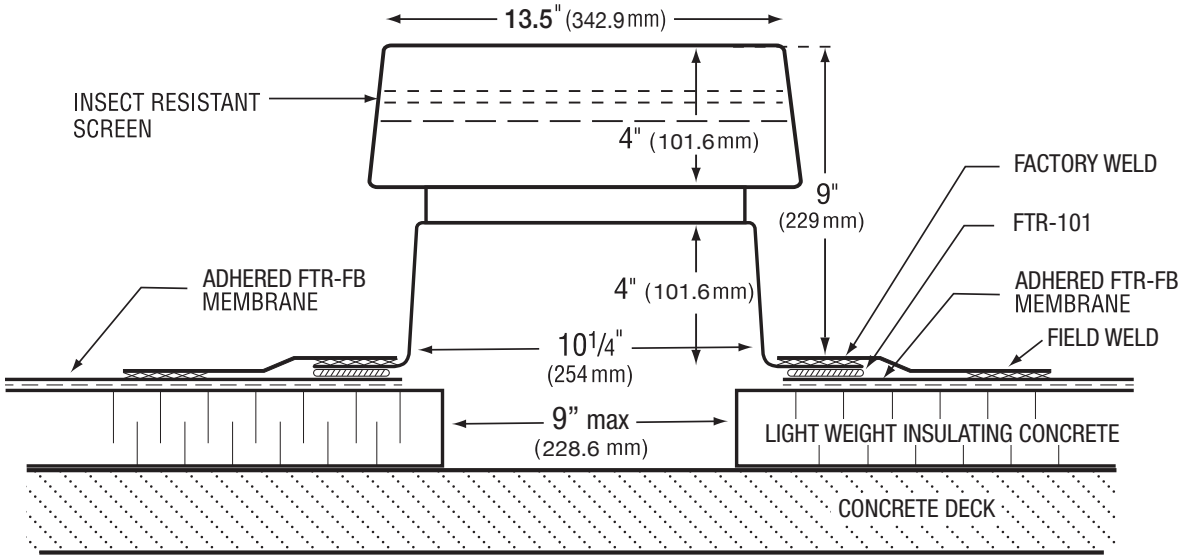

FiberTite INTELLIGENT ROOFING SOLUTIONS

For more information on FiberTite Systems and accessories please call:
Seaman Corporation (800) 927-8578
International (330) 262-1111
www.fibertite.com

SPRI Single Ply Roofing Industry
CFFA Chemical Fabrics & Film Association, Inc.

FiberTite® is a registered trademark of Seaman Corporation.

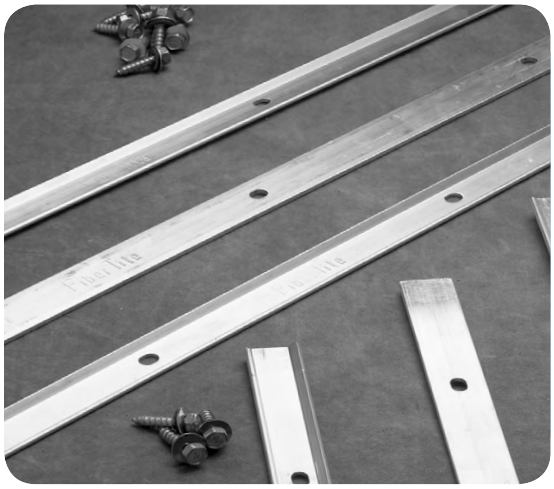

FTR-Termination Bar

Product Data

FTR-Termination Bar is designed and intended for attaching and compression sealing FiberTite membrane and flashing terminations.

DESCRIPTION

FTR-Termination Bar is designed and intended for use with FiberTite Roofing Systems (FTR). FTR-Termination Bar is made of corrosion-resistant extruded 6063 T5 aluminum with a mill type finish.

Bars are pre-punched with slotted holes measuring 0.28 in x 0.38 in (0.66 cm x 0.97 cm) at 7.8 in (2.0 cm) intervals. Each FTR Termination bar measures 10 ft (3m) in length.

Fasteners with metal, neoprene backed sealing washers are to be used when bars will be exposed to the weather. Seaman Corporation offers a variety of fasteners for use with FTR Termination Bars as substrates dictate.

APPLICATION

FiberTite FTR-Termination Bar is designed for mechanical attachment to either provide linear restraint at flashing transitions or compression seals at flashing termination points. Consult the most current versions of Guide Specifications for the Installation of FiberTite Roofing Systems and Installation Details for installation requirements, cautions and parameters.

PHYSICAL PROPERTIES

T-Bar with Lip	
Thickness	0.125 in (0.32 cm)
Width	1.0 in (2.5 cm)
Lip Width	0.25 in (0.64 cm)
Lip Angle	45°
Flat Bar	
Thickness	0.125 in (0.32 cm)
Width	1.0 in (2.5 cm)

For more information on FiberTite Systems and accessories please call:
Seaman Corporation (800) 927-8578
International (330) 262-1111
www.fibertite.com

FiberTite® is a registered trademark of Seaman Corporation.

INTELLIGENT ROOFING SOLUTIONS

These specifications are current as of the date of printing. Revisions or additions may be issued periodically. For a listing, presentation, and download of the most recent data, visit:
www.FiberTite.com/document-library/product-data-sheets

USG Roofing Solutions



USG SECUROCK® BRAND CEMENT ROOF BOARD

High-performance reinforced cement roof board for use in low-slope roofing systems

- Ideal for use as a cover board in system applications such as liquid-applied membranes or as a parapet, fire or thermal barrier roof board
- Lightest 1/2 in. cement board in the industry
- Water-durable, mold-resistant substrate
- Will not rot, warp, delaminate or disintegrate
- Easy to cut and fasten
- Noncombustible

DESCRIPTION

USG Securock® Brand Cement Roof Board is a high-performance roof board for use in low-slope roofing systems. As the lightest and easiest-to-use cement board in the industry, it enhances the entire roofing system as both a cover board and as a parapet, fire or thermal barrier roof board. As a cover board, USG Securock® Cement Roof Board can be used with a variety of membranes and systems including adhered and mechanically attached systems, but it is ideal for applications such as liquid-applied membranes and cold mastic-modified bitumen. As a parapet, fire or thermal barrier roof board, USG Securock® Cement Roof Board has an unlimited slope classification and is noncombustible. Because this product is cement-based, it provides superior compressive strength, water durability and mold resistance.

INTENDED FOR

Exceptional Strength: Engineered to provide superior wind-uplift performance for a wide variety of roof assemblies. USG Securock® Cement Roof Board is formed in a continuous process using an aggregated Portland cement slurry with polymer-coated, glass-fiber mesh completely encompassing edges and both surfaces, which enhances bond strength of membrane systems and gives excellent resistance to delamination.
Fire Performance: Meets Factory Mutual (FM) Class 1 and Underwriters Laboratories (UL) Class A fire ratings for unlimited slope in fire-barrier applications per UL790.
Moisture and Mold: Scored a maximum “10” for mold resistance on ASTM D3273 and is highly water durable.
Versatile: Can be used as a component in single-ply, fluid-applied, spray foam, metal and cold-applied modified bitumen roofing. Available in both 4′ x 8′ and 4′ x 4′ sizes.

INSTALLATION

- Refer to roof system manufacturer’s written instructions, local code requirements and Factory Mutual Global (FMG) and/or Underwriters Laboratories (UL) requirements for proper installation techniques.
- Use fasteners specified in accordance with above requirements. Install approved fasteners with plates into the USG Securock® Cement Roof Board, flush with the surface. Fasteners should be installed in strict compliance with the roof system manufacturer’s installation recommendations and FMG Loss Prevention Data Sheet 1-29. **A qualified architect engineer should review and approve calculations, framing and fastener spacing for all projects.**
- Locate edge joints on, and parallel to, deck ribs. Stagger end joints of adjacent lengths of USG Securock® Cement Roof Board.
- Roof boards should never be installed if they exhibit frost.
- For vertical parapet applications—maximum stud spacing: 16″ o.c., maximum fastener spacing: 8″ o.c. for wood and steel framing. Always consult a design professional for actual spacing.

USG
IT’S YOUR WORLD. BUILD IT.®

LIMITATIONS

- USG Securock® Cement Roof Board is engineered to perform within a properly designed roof system. The use of USG Securock® Cement Roof Board as a roofing component is the responsibility of the design professional.
- Consult roofing manufacturers for specific instructions on the application of their products to USG Securock® Cement Roof Board. For fully adhered fiberglass reinforced membranes, consult the membrane manufacturer.
- Weather conditions, dew, application temperature, installation techniques and moisture can have adverse effects on the performance of the roof system and are beyond the control of USG.
- Keep USG Securock® Cement Roof Board panels dry before, during and after installation. USG Securock® Cement Roof Board should not be installed during rain, heavy fog and any other conditions that deposit moisture on the surface of the board. Apply only as much USG Securock® Cement Roof Board that can be covered by final roof membrane system in the same day. Avoid exposure to moisture from leaks or condensation.
- Wind uplift (vertical pull) of the roof system as installed can be affected by many factors beyond USG's control, including moisture migrating into the roof assembly from inside or outside the building, proper fastener spacing, the quality of installation especially for fasteners and whether the framing has been properly designed and installed to meet strength and deflection criteria specified in the contract documents. For all these reasons, USG cannot guarantee the wind-uplift resistance (vertical pull) of any roof assembly or system containing USG roof boards.
- Moisture from inside the building can be as big a risk for the roof system as moisture from outside. The contractor installing the roof and the design professional should protect the roof assembly not only from excessive moisture during the construction of the building (new concrete, paint, plaster materials) but also after the building is dried in. The HVAC system must properly manage moisture generated by the occupants of the building to make sure it is vented to the outside and does not migrate into the roof system.
- Panel spacing may be needed based on factors like roof deck's size, membrane color, ultimate deck surface temperature and time of year the roof is installed. The designer of record should use USG's published physical properties below to determine if spacing is needed.
- For reroof or re-cover applications, existing roofing system must be dry throughout prior to application of USG Securock® Cement Roof Board.
- Plastic or poly packaging applied at the plant to protect board during rail or other transit should be removed upon receipt to prevent condensation or trapping of moisture, which may cause application problems.
- USG Securock® Cement Roof Board should be stored flat and off the ground with protection from the weather. Preferred storage location is an enclosed shelter providing protection from the elements. However, if stored outdoors, a breathable waterproof covering should be used.
- When applying solvent-based adhesives or primers, allow sufficient time for the solvent to evaporate to avoid damage to roofing components.
- USG Securock® Cement Roof Board is formulated to develop fine microcracking (also known as multiple cracking) in the panel. The microcracking process helps to evenly relieve the stored strain energy in the product due to handling and installation, external loads and/or panel restrained movement. The presence of microcracks in the panel should not be considered a product defect.
- USG recommends maximum asphalt application temperature for Type III asphalt of 450 °F when using USG Securock® Cement Roof Board. Application temperatures above these recommended temperatures may adversely affect roof system performance. USG does not recommend applying direct heat to Securock® Cement Roof Board when torching a membrane.

FIRE PERFORMANCE

- UL Classified (Type DCB) as to Surface Burning Characteristics in accordance with ASTM E84 (CAN/ULC-S102).
  - Flame Spread 0 and Smoke Developed 0
  - Noncombustile Core per ASTM E136-12 (CAN/ULC-S114)
- Class A unlimited slope in accordance with UL790 (CAN/ULC-S107). See the *UL Building Materials Directory* for more information.

SYSTEM PERFORMANCE

- FM Approved
- Complies with requirements of FM 4450 and FM 4470
- Meets FM Class 1

STANDARDS COMPLIANCE

USG Securock® Cement Roof Board is manufactured to conform to ASTM C1325, "Standard for Non-Asbestos Fiber-Mat Reinforced Cementitious Backer Units."

PHYSICAL PROPERTIES

Thickness, nominal	1/2″ (12.7 mm)	5/8″ (15.9 mm)
Width, standard	4′ (1,219 mm)	4′ (1,219 mm)
Length, standard	4′ (1,219 mm) and 8′ (2,438 mm)	4′ (1,219 mm) and 8′ (2,438 mm)
Pieces per unit for 4′ x 8′ sheet	30	24
Weight, nominal lb./unit 4′ x 8′ sheets	2,375	2,880
Weight, nominal lb./sq. ft.	2.4	3.0
Flexural strength, parallel, psi, per ASTM C947	>750	>480
Compressive strength, psi nominal	>1,000 (6.9 MPa)	>1,250 (8.6 MPa)
Flute spannability per ASTM E661	12″	12″
Permeance, perms per ASTM E96	5.84	5.84
R Value, °F.ft² .h/Btu, per ASTM C518	0.39	0.49
Coefficient of thermal expansion, inches (inch • °F), per ASTM E831	4.5×10^{-6}	4.5×10^{-6}
Linear variation with change in moisture, %, per ASTM D1037	<0.07	<0.07
Water absorption, % max, per ASTM C473	<15	<15
Mold resistance per ASTM D3273*	10	10
Minimum bending radius	6′	6′

***ASTM D3273 Mold Resistance Testing:** In independent lab tests conducted on USG Securock® Cement Roof Board at the time of manufacture per ASTM D3273 Standard Test Method for Resistance to Growth of Mold on the Surface of Interior Coatings in an Environmental Chamber, scored a 10. The ASTM lab test may not accurately represent the mold performance of building materials in actual use. Given unsuitable project conditions during storage, installation or after completion, any building material can be overwhelmed by mold. To manage the growth of mold, the best and most cost-effective strategy is to protect building products from water exposure during storage and installation and after completion of the building. This can be accomplished by using good design and construction practices.

SUBMITTAL APPROVALS

Job Name	
Contractor	**Date**

PRODUCT INFORMATION
See usg.com for the most up-to-date product information.

DANGER
Causes skin irritation. Causes serious eye damage. May cause an allergic skin reaction. May cause respiratory irritation. May cause cancer by inhalation of respirable crystalline silica. Do not handle until all safety precautions have been read and understood. Avoid breathing dust. Use only in a well-ventilated area, wear a NIOSH/MSHA-approved respirator. Wear protective gloves/protective clothing/eye protection. If swallowed, inhaled, or skin irritation occurs get medical attention. If on skin: Wash with plenty of water. If in eyes: Rinse cautiously with water for several minutes. Remove contact lenses and continue rinsing. Contaminated work clothing should not be allowed out of the workplace. Wash contaminated clothing before reuse. Dispose of in accordance with local, state, and federal regulations. For more information call Product Safety: 800-507-8899 or see the SDS at usg.com
KEEP OUT OF REACH OF CHILDREN.

TRADEMARKS
The trademarks USG, SECUROCK, IT'S YOUR WORLD. BUILD IT., the USG logo, the design elements and colors, and related marks are trademarks of USG Corporation or its affiliates.

NOTE
Products described here may not be available in all geographic markets. The information in this document is subject to change without notice. USG Corp. and/or its affiliates assume no responsibility for any errors that may inadvertently appear in this document. Consult your USG sales office or representative for information.

NOTICE
We shall not be liable for consequential, incidental or special damages, directly or indirectly sustained, nor for any loss caused by application of these goods not in accordance with current printed instructions or for other than the intended use. Our liability is expressly limited to the replacement of defective goods or a refund of the purchase price, at USG's option, and does not include costs of labor or any other costs associated with material replacement. Any claim shall be deemed waived unless made in writing to us within thirty (30) days from date it was or reasonably should have been discovered.
For all terms and conditions see usg.com/terms-and-conditions.

SAFETY FIRST!
Follow good safety/industrial hygiene practices during installation. Wear appropriate personal protective equipment. Read applicable SDSs and literature before specification and installation.

800 USG.4YOU
800 (874-4968)
usg.com

Manufactured by
United States Gypsum Company
550 West Adams Street
Chicago, IL 60661

RF51-USA-ENG/rev. 6-26
© 2026 USG Corporation and/or its affiliates. All rights reserved.
Printed in USA

USG
IT'S YOUR WORLD. BUILD IT.™

USG Roofing Solutions

SUBMITTAL SHEET

USG SECUROCK® BRAND GYPSUM-FIBER ROOF BOARD



High-performance gypsum-fiber roof board for use in low-slope commercial roofing systems

- Exceptional bond and low absorption in adhered systems
- Moisture- and mold-resistant
- Excellent wind-uplift performance
- Manufactured from 97% recycled material

DESCRIPTION

USG Securock® Brand Gypsum-Fiber Roof Board is a high-performance roof board for use in low-slope roofing systems. Its unique fiber-reinforced, uniform composition gives the panel strength and water resistance through to the core. USG Securock Gypsum-Fiber Roof Board provides exceptional bond and low absorption in adhered systems and, with uniform composition, achieves high wind-uplift ratings with no risk of facer delamination. Made from 97% recycled material, USG Securock Gypsum-Fiber Roof Board combines superior performance with sustainable design for all types of built-up roofing systems and most fluid applied, spray foam, metal and any polyester reinforced single ply or modified bitumen membrane systems.

ADVANTAGES

Exceptional Strength: Engineered to provide superior wind-uplift performance for a wide variety of roof assemblies. USG Securock Gypsum-Fiber Roof Board has a uniform composition, providing enhanced bond strength of membrane systems with no risk of facer delamination.

Fire Performance: Provides excellent fire performance and demonstrates exceptional surface burning characteristics (ASTM E84 [CAN/ULC-S102] Flame Spread 5, Smoke Developed 0).

Moisture and Mold: Uniform water-resistant core ensures excellent moisture and mold resistance. Scored a maximum "10" for mold resistance on ASTM D3273.

Versatile: Can be used as a component in most single-ply, fluid-applied, built-up, spray foam, metal and modified bitumen roofing.

Sustainability: Made from 97% recycled materials.

INSTALLATION

- Refer to roof system manufacturer's written instructions, local code requirements and Factory Mutual Global (FMG) and/or Underwriters Laboratories (UL) requirements for proper installation techniques.
- Use fasteners specified in accordance with above requirements. Install approved fasteners with plates into the USG Securock Gypsum-Fiber Roof Board, flush with the surface. Fasteners should be installed in strict compliance with the roof system manufacturer's installation recommendations and FMG Loss Prevention Data Sheet 1-29. **A qualified architect or engineer should review and approve calculations, framing and fastener spacing for all projects.**
- Locate edge joints on, and parallel to, deck ribs. Stagger end joints of adjacent lengths of USG Securock Gypsum-Fiber Roof Board.
- All board edges should be loosely abutted and never kicked in tight in typical installations.
- Roof boards should never be installed if they exhibit frost or are below 32°F.
- See product data table below for maximum flute span when panels are applied directly over metal decking.
- For vertical parapet applications, only 1/2" or 5/8" panels should be used. Maximum framing spacing is 24" o.c.

USG
IT'S YOUR WORLD. BUILD IT.®

LIMITATIONS

- USG Securock Gypsum-Fiber Roof Board is engineered to perform within a properly designed roof system. The use of USG Securock Gypsum-Fiber Roof Board as a roofing component is the responsibility of the design professional.
- Consult roofing manufacturers for specific instructions on the application of their products to USG Securock Gypsum-Fiber Roof Board. For fully adhered fiberglass reinforced membranes consult the membrane manufacturer.
- Weather conditions, dew, application temperature, installation techniques and moisture drive can have adverse effects on the performance of the roof system and are beyond the control of USG.
- Keep USG Securock Gypsum-Fiber Roof Board panels dry before, during and after installation. USG Securock Gypsum-Fiber Roof Board should not be installed during rain, heavy fog and any other conditions that deposit moisture on the surface of the board. Apply only as much USG Securock Gypsum-Fiber Roof Board that can be covered by final roof membrane system in the same day. Avoid exposure to moisture from leaks or condensation.
- Wind uplift (vertical pull) of the roof system as installed can be affected by many factors beyond USG's control, including moisture migrating into the roof assembly from inside or outside the building, proper fastener spacing, the quality of installation especially for fasteners and whether the framing has been properly designed and installed to meet strength and deflection criteria specified in the contract documents. For all these reasons, USG cannot guarantee the wind-uplift resistance (vertical pull) of any roof assembly or system containing USG roof boards.
- Moisture from inside the building can be as big a risk for the roof system as moisture from outside. The contractor installing the roof and the design professional should protect the roof assembly not only from excessive moisture during the construction of the building (new concrete, paint, plaster materials) but also after the building is dried in. The HVAC system must properly manage moisture generated by the occupants of the building to make sure it is vented to the outside and does not migrate into the roof system.
- Panel spacing may be needed based on factors like roof deck's size, membrane color, ultimate deck surface temperature and time of year the roof is installed. The designer of record should use USG's published physical properties below to determine if spacing is needed.
- For reroof or re-cover applications, existing roofing system must be dry throughout prior to application of USG Securock Gypsum-Fiber Roof Board.
- Plastic or poly packaging applied at the plant to protect board during rail or other transit should be removed upon receipt to prevent condensation or trapping of moisture, which may cause application problems.
- USG Securock Gypsum-Fiber Roof Board should be stored flat and off the ground with protection from the weather. If stored outdoors, a breathable waterproof covering should be used.
- When applying solvent-based adhesives or primers, allow sufficient time for the solvent to evaporate to avoid damage to roofing components.
- USG allows the bonding of cold mastic-modified bitumen, low rise urethane foam and torching directly to the surface. Consult with the system manufacturer for recommendation on these applications.
- USG recommends maximum asphalt application temperature for Type III **or Type IV** asphalt of 455° F when using USG Securock Gypsum-Fiber Roof Board. Application temperatures above these recommended temperatures may adversely affect roof system performance.

FIRE PERFORMANCE

- UL Classified (Type FRX-G) as to Surface Burning Characteristics in accordance with ASTM E84 (CAN/ULC-S102).
  — Flame Spread 5 and Smoke Developed 0
- 1/4", 3/8", 1/2" and 5/8" thickness—Class A in accordance with UL790 (CAN/ULC-S107). See the *UL Building Materials Directory* for more information.
- 5/8" thickness—Meets requirements of Type X per ASTM C1278 and may be used in P series designs as a thermal barrier.

SYSTEM PERFORMANCE

- FM Approved
  — Complies with requirements of FM 4450 and FM 4470
  — Meets FM Class 1

STANDARDS COMPLIANCE

USG Securock Gypsum-Fiber Roof Board is manufactured to conform to ASTM C1278, "Standard Specification for Fiber-Reinforced Gypsum Panel."

PHYSICAL PROPERTIES

	1/4″ (6.3 mm)	3/8″ (9.5 mm)	1/2″ (12.7 mm)	5/8″ (15.9 mm)
Width, standard	4′ (1,219 mm)	4′ (1,219 mm)	4′ (1,219 mm)	4′ (1,219 mm)
Length, standard	4′ (1,219 mm) and 8′ (2,438 mm)	4′ (1,219 mm) and 8′ (2,438 mm)	4′ (1,219 mm) and 8′ (2,438 mm)	4′ (1,219 mm) and 8′ (2,438 mm)
Pieces per unit for 4′ x 8′ sheets	50	40	30	24
Weight, nominal lb./unit, 4′ x 8′ sheet	2,575	2,575	2,725	2,525
Weight, nominal lb./sq. ft.	1.57	1.96	2.76	3.20
Flexural strength, parallel, lb. min., per ASTM C473	40	70	110	161
Compressive strength, psi nominal	1,800 (12.4MPa)	1,800 (12.4MPa)	1,800 (12.4MPa)	1,800 (12.4MPa)
Flute spanability per ASTM E661	2-5/8″	5″	8″	10″
Permeance, perms, per ASTM E96	30	26	26	24
R Value per ASTM C518	0.2	0.3	0.5	0.6
Coefficient of thermal expansion, inches/inch • °F, per ASTM E831	8.0×10^{-6}	8.0×10^{-6}	8.0×10^{-6}	8.0×10^{-6}
Linear variation with change in moisture, inches/inch • % RH, per ASTM D1037	8.0×10^{-6}	8.0×10^{-6}	8.0×10^{-6}	8.0×10^{-6}
Water absorption, % max, per ASTM C473	10	10	10	10
Surface water absorption, nominal grams, per ASTM C473	1.6	1.6	1.6	1.6
Mold resistance per ASTM D3273*	10	10	10	10
Bending radius	25′	25′	25′	30′

***ASTM D3273 Mold Resistance Testing:** In independent lab tests conducted on USG Securock® Brand Gypsum-Fiber Roof Board and USG Securock® Brand UltraLight Glass-Mat Roof Board at the time of manufacture per ASTM D3273 Standard Test Method for Resistance to Growth of Mold on the Surface of Interior Coatings in an Environmental Chamber, both panels scored a 10. The ASTM lab test may not accurately represent the mold performance of building materials in actual use. Given unsuitable project conditions during storage, installation or after completion, any building material can be overwhelmed by mold. To manage the growth of mold, the best and most cost-effective strategy is to protect building products from water exposure during storage and installation and after completion of the building. This can be accomplished by using good design and construction practices.

SUBMITTAL APPROVALS

Job Name	
Contractor	**Date**

PRODUCT INFORMATION
See usg.com for the most up-to-date product information.

CAUTION
Dust may cause irritation to eyes, skin, nose, throat, and upper respiratory tract. Cut and trim with a utility knife or hand saw to minimize dust levels. Power tools must be equipped with a dust collection system. Wear eye, skin, and respiratory protection if necessary. If eye contact occurs, flush thoroughly with water for 15 minutes. If irritation persists, call physician. Do not swallow. If swallowed, call physician. For more information call Product Safety: 800 507-8899 or see the SDS at usg.com
KEEP OUT OF REACH OF CHILDREN.

TRADEMARKS
The trademarks USG, SECUROCK, IT'S YOUR WORLD. BUILD IT., the USG logo, the design elements and colors, and related marks are trademarks of USG Corporation or its affiliates.

NOTE
Products described here may not be available in all geographic markets. Consult your USG Company sales office or representative for information.

NOTICE
We shall not be liable for incidental and consequential damages, directly or indirectly sustained, nor for any loss caused by application of these goods not in accordance with current printed instructions or for other than the intended use. Our liability is expressly limited to replacement of defective goods. Any claim shall be deemed waived unless made in writing to us within thirty (30) days from date it was or reasonably should have been discovered.

SAFETY FIRST!
Follow good safety/industrial hygiene practices during installation. Take necessary precautions and wear the appropriate personal protective equipment as needed. Read SDS and literature before specification and installation.

800 USG.4YOU
800 (874-4968)
usg.com

Manufactured by
United States Gypsum Company
550 West Adams Street
Chicago, IL 60661

RF5-USA-ENG/rev. 12-20
© 2020 USG Corporation and/or its affiliates. All rights reserved. Printed in USA

USG
IT'S YOUR WORLD. BUILD IT.®

VAPOR BARRIER



VaporTite™

Product Data

Seaman Corporation / FiberTite® offer a self-adhered bitumen and SBS polymeric Class I Vapor Barrier under the Trade name VaporTite.

DESCRIPTION

VaporTite is a self-adhered vapor barrier membrane for steel decks composed of SBS-modified bitumen adhesive on the bottom surface and a tri-laminated woven polyethylene on the top surface. A silicone release film covers the adhesive under the surface. The material is installed with a 3-in (76 mm) side lap and 6-in (152 mm) end lap.

APPLICATION

VaporTite membrane may be installed on a steel deck, plywood, gypsum or concrete barrier boards, or structural concrete. Except for the steel deck, all substrates must be primed with FTR SA Primer. All surfaces must be clean and dry prior to application of the primer. The minimum application temperature for VaporTite is 32°F (0°C).

STORAGE

VaporTite is packaged in boxes with 25 per pallet. Store boxes/rolls of product on end on a clean and flat surface elevated above the deck. Do not store in a leaning or horizontal position as deformation may occur. All materials shall be stored in a dry place, out of direct exposure to the elements. VaporTite shall be handled in such a manner as to ensure that it remains dry prior to and during installation.

APPROVALS

VaporTite is FM Approved for specific FiberTite assemblies and listed in RoofNav. Note: FM does not permit self-adhered membranes to be installed direct to steel decks.

PHYSICAL PROPERTIES

Property (as manufactured)	Values/Units	Test Method
Thickness (average)	31 mils (.8 mm)	ASTM D 5147
Peak Load @ 73°F (average)	MD: 54 lb_f/in (9.5 kN/m) XMD: 74 lb_f/in (13.0 kN/m)	ASTM D 5147
Elongation @ Peak Load, 73°F (average)	MD: 33% XMD: 25%	ASTM D 1547
Tear Strength (average)	MD: 95 lb_f (423 N) XMD: 103 lb_f (458 N)	ASTM D 1970
Static Puncture	90 lb_f (400 N)	ASTM D 5602
Water Vapor Permeance	0.06 perm (3.4 ng/Pa/s/m^2)	ASTM E 96 procedure B
Air Permeability	,0.0021/sec/m^2	ASTM E 283 (75 pa)
Lap Adhesion	68 lb_f /ft (1000 N/m)	ASTM D 876
Water Absorbtion	0.1%	ASTM D 5147
Cold Blend	-58°F (-50°C)	ASTM D 5147

Roll Width: 45 in (1.1m)

Roll Length: 134 ft (40.8 m)

Coverage: 468 ft^2 (43.5 m^2)

Roll Weight: 80 lb (35.8 kg)

For more information on FiberTite Systems and accessories please call:
Seaman Corporation (800) 927-8578
International (330) 262-1111
www.FiberTite.com

FiberTite® is a registered trademark of Seaman Corporation.

These specifications are current as of the date of printing.
Revisions or additions may be issued periodically. For a listing, presentation, and download of the most recent data, visit:

www.fibertite.com/document-library/product-data-sheets

Subject to the conditions of Approval for a roof covering when installed as described in the current edition of the Approval Guide.

WRAPID® FLASH

FiberTite® INTELLIGENT ROOFING SOLUTIONS



Finally, field wrapping a pipe is easy.

Flashing any size conduit or pipe using a typical field wrap detail is labor intensive when compared to just dropping a boot over a pipe penetration. It also takes a special talent to properly pattern the base and collar and effectively tie the two together, ensuring the finished detail is watertight and meets the aesthetic expectations of the customer.

Seaman Corporation's injection molded FiberTite® WRAPID Flash™ pipe flashing makes wrapping any cylindrical penetration simple and consistent. This revolutionary boot reduces labor dramatically, enhances seal quality and improves the appearance of the roof.

Better Protection: Single piece, injected molding eliminates faulty field fabricated seams.

Fast & Easy: Installation requires just five steps and takes the average roofer 4 to 5 minutes to complete saving time and money.

No More Guessing: Designed with integrated measurements and cut guidelines for quick and accurate trimming.

Looks Great: WRAPID Flash is 70 mil thick providing a durable structure that eliminates sagging. The unique shape produces less flaring, funneling and curling making seams flatter and better looking.

Versatile Design: WRAPID Flash fits conduit and pipes from ¾-inch to 3-inch.



FiberTite® WRAPID Flash® by Seaman Corporation is faster and easier to install and produces stronger and better looking seals around rooftop conduit and pipes.

Seaman Corporation • 800-927-8578 • 1000 Venture Blvd. • Wooster, OH 44691 • www.seamancorp.com

Testing

Preemptive Strike Environmental Inspections LLC
Finding Hazards Before They Find You

ASBESTOS ROOF SURVEY REPORT

Subject Property:

Broward Health Imperial Point
6401 Federal Highway
Fort Lauderdale, Florida 33308



Inspection Date: January 23, 2026
Report Date: February 4, 2026

Website: www.prestrikenow.com
Email: inspector@prestrikenow.com

Standing Ready to Provide Your
Asbestos Inspections ● Asbestos Post Abatement Clearance Inspections ● Asbestos O & M Plans
Lead Based Paint Inspections ● Lead Based Paint Clearance Inspections ● Lead Hazard Risk Assessments

PREEMPTIVE STRIKE
ENVIRONMENTAL INSPECTIONS

Report Date: February 4, 2026

To: **Turnkey Roof Consulting Inc.**
3260 Northwest 23rd Avenue, Suite 300E
Pompano Beach, Florida 33069

Re: **Roof Survey Report - Broward Health Imperial Point**
6401 Federal Highway
Fort Lauderdale, Florida 33308
Preemptive SEI Project No.: TRK260129

Preemptive Strike Environmental Inspections LLC (Preemptive SEI) hereby presents this asbestos-containing material (ACM) roof survey report for the property located, 6401 Federal Highway, Fort Lauderdale, Florida 33308. This report presents the findings from the asbestos survey and sample testing along with our conclusions and recommendations.

Executive Summary: No asbestos detected.

Preemptive SEI appreciates the opportunity to serve as your consultant on this project. If you should have any questions, or if we can be of further service, please do not hesitate to call.

Respectfully Submitted,



Toi Akien, LAC, CSP
Florida Licensed Asbestos Consultant
License No. AX98

Table of Contents

1.1 INTRODUCTION....3
2.0 RESULTS....3
2.1 ASBESTOS SURVEY PROCEDURES....3
2.2 IDENTIFIED SUSPECT ASBESTOS-CONTAINING MATERIALS....4
3.0 CONCLUSIONS AND RECOMMENDATIONS....4

APPENDICES
Appendix A - Bulk Sample Location Map
Appendix B - PLM Analytical Laboratory Results and Chain-of Custody
Appendix C - Certifications

1.0 PROJECT OVERVIEW

1.1 INTRODUCTION

The purpose of this survey was to identify the presence of asbestos-containing materials (ACMs) if present within select roofing materials, located at 6401 Federal Highway, Fort Lauderdale, Florida 33308. The survey was conducted pursuant to National Emission Standards for Hazardous Air Pollutants (NESHAP, 40 CFR 61) requirements, associated with pending roof renovations. The scope of this survey did not include demolition of any building components, evaluation of architectural plans, or the quantification of materials for abatement purposes, or removal cost estimating.

2.0 RESULTS

2.1 ASBESTOS SURVEY PROCEDURES

The survey was performed by visually observing accessible areas of the building roof. An EPA/AHERA accredited inspector performed the visual. After the overall visual survey was completed, representative sampling areas were determined. The surveyor delineated homogeneous areas of suspect materials and samples of each material were obtained in general compliance with regulations as established by the Occupational Safety and Health Administration (OSHA) and NESHAP. The field surveyor determined sample locations based on previous experience. Both friable and non-friable materials were sampled. A friable material is one that can be crushed when dry by normal hand pressure. This survey did not include the demolition of building components to access suspect material. After completion of the fieldwork, the samples were delivered to an EmLab Analytical Laboratory. EmLab is a National Voluntary Laboratory Accreditation Program (NVLAP) accredited laboratory. The samples were analyzed by Polarized Light Microscopy (PLM) coupled with dispersion staining, in general accordance with EPA-600/R-93/ 116. Utilizing this procedure, the various asbestos minerals (chrysotile, amosite, crocidolite, actinolite, tremolite, and anthophyllite) can be determined. The percentages of asbestos minerals in the samples were visually determined by the microscopist. Please note that the EPA designates all materials containing greater than 1% asbestos as an "asbestos-containing material" (ACM). Regulated Asbestos-Containing Material (RACM) is defined as (a) Friable asbestos materials, (b) Category I non-friable ACM that has become friable, (c) Category I non-friable ACM that will be or has been subjected to sanding, grinding, cutting, or abrading, or (d) Category II nonfriable ACM that has a high probability of becoming or has become crumbled, pulverized, or reduced to powder by the forces expected to act on the material in the course of demolition or renovation operations regulated by this subpart.

Category I and Category II non-friable ACM, as defined by the EPA. Category I non-friable ACM means asbestos containing packings, gaskets, resilient floor covering, and asphalt roofing products containing more than 1 percent asbestos as determined using the method specified in Appendix E, Subpart E, 40 CFR Part 763, Section 1, PLM. Category II non-friable ACM means any material, excluding Category I nonfriable ACM, containing more than 1 percent asbestos as determined using the methods specified in Appendix E, Subpart E, 40 CFR Part 763 Section 1, PLM that, when dry, cannot be crumbled, pulverized, or reduced to powder by hand pressure.

2.2 IDENTIFIED SUSPECT ASBESTOS-CONTAINING MATERIALS

A total of twelve (12) samples of suspect building materials were collected from the facility roof during the survey, representing different homogeneous areas. A summary of the homogenous sampling areas of suspect ACM determined to be present is outlined in the following table:

(HA) Areas	Material Class	Material Description	Total Samples Collected	Material Friability	Asbestos
Roof 10 *(Reference Attached Sketch)*					
01	M	Field - Asphalt Ply / Felt / Brown Ins	2	NF	Non-Detect
02	M	Flashing - White Coating / Asphalt Ply / Felt	2	NF	Non-Detect
03	M	Pitch Pan - Black Pitch	1	NF	Non-Detect
Roof 9 (*Reference Attached Sketch)*					
04	M	Field - White Coating / Foam / Asphalt Ply / Felt	2	NF	Non-Detect
05	M	Pitch Pan - White Coating / Foam	1	NF	Non-Detect
06	M	Flashing - White Coating / Foam / Asphalt Ply / Felt	2	NF	Non-Detect
07	M	Flashing - White Coating / Foam	2	NF	Non-Detect

CHART ABBREVIATION NOTES:

HOMOGENEOUS AREA (HA):
HA = An area of surfacing material, thermal system insulation material, or miscellaneous material that is uniform in color and texture.

MATERIAL CLASS:
S = Surfacing Materials
TSI = Thermal System Insulation
M = Miscellaneous Material

MATERIAL QUANTITY:
TBD = To Be Determined

ABBREVIATION:
VCT = Vinyl composition tile
ACT = Acoustic Ceiling Tiles

NESHAP CATEGORY:
Cat I = Category I Non-Friable
Cat II = Category II Non-Friable
Fri = Friable

FRIABILITY:
F = Friable: Material that may be crumbled, pulverized, or reduced to powder by hand pressure when dry.
NF = Non-Friable: Material that, when dry, may not be crumbled, pulverized, or reduced to powder by hand pressure.

MEASURMENTS:
SF = Square Feet
LF = Linear Feet

Bold = Material reported to contain asbestos mineral fibers in sample material.
" **–** " = No asbestos mineral fibers detected in sample material.
Positive = Asbestos Containing Material (ACM) = Asbestos detected in concentrations greater than one percent (>1%).

3.0 CONCLUSIONS AND RECOMMENDATIONS

No asbestos detected within the roofing materials tested.

Best Regards,
Preemptive Strike Environmental Inspections, LLC

Toi Akien
Licensed Asbestos Consultant - License No. AX98

Attachments:

APPENDIX A - Field Log
APPENDIX B - PLM Analytical Laboratory Results and Chain-of Custody
APPENDIX C - Certifications

APPENDIX A

Field Log

)B NAME: Broward Health Im

ATE: 01 / 23 / 26

RCI # : 26-031

EVICE / SERIAL #: _____

ECK: NEW / (EXISTING) (Circle One)

2 GRID: LESS THAN 400 SQ. FT.
5 GRID: BETWEEN 401 & 9,999 SQ. FT. (ACCEPTABLE @ 7,999 SQ. FT.)
X10 GRID: 10,000 SQ. FT. OR MORE (ACCEPTABLE @ 8,000 SQ. FT.)

Turnkey Roof Consulting Inc.

Surpassing Expectations

SQ: _____

LENGTH: _____

WIDTH: _____

HEIGHT: _____

ROOF SYSTEM: _____

DECK: (Concrete) Steel Wood Other (Circle One)

NOTES: _____

ROOF AREA

Roof 9

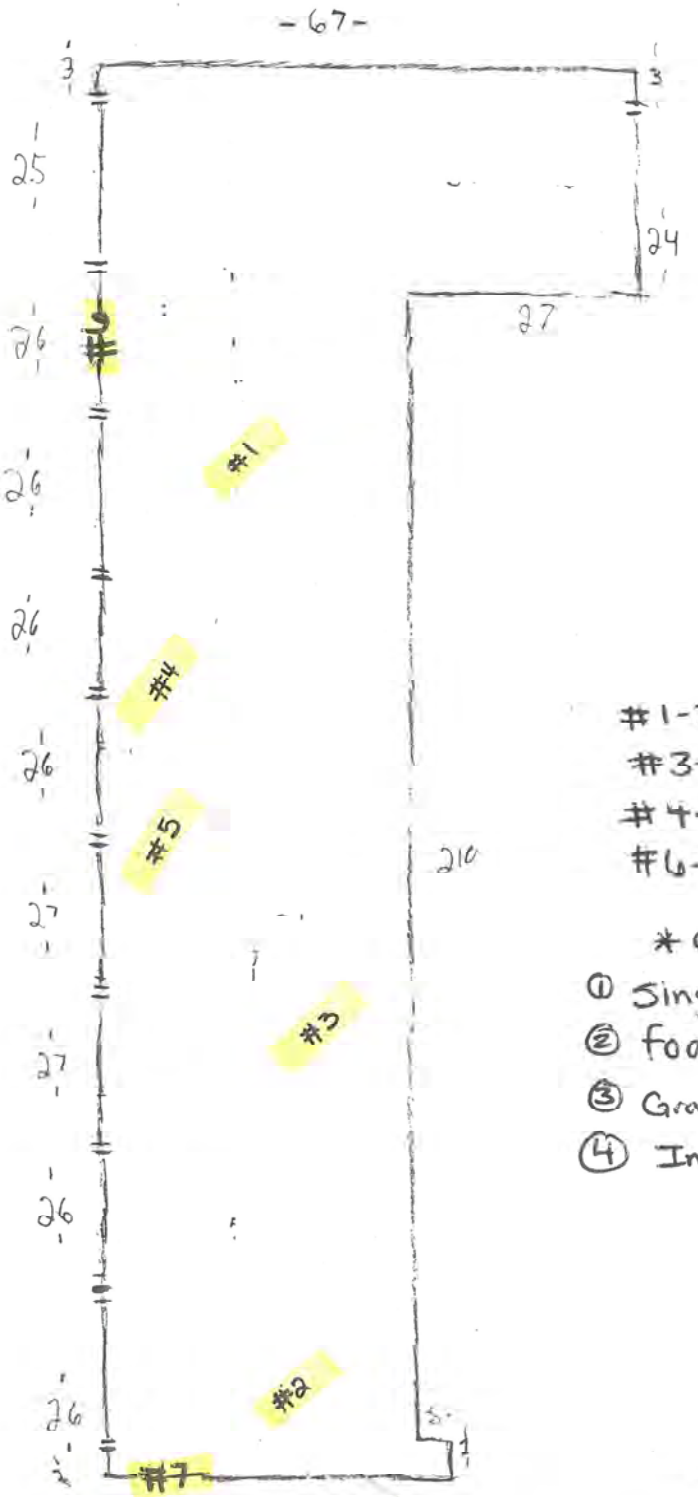

#1-2 - Fields
#3 - Pitch Pan
#4-5 - vent flashing
#6-7 - Wall flashing

* Components *
① Single-Ply
② foam
③ Gravel Modified
④ Insulation

Jonathan Clay

B NAME: Broward Health Imp

TE: 01/23/26

CI #: 26-031

VICE / SERIAL #: _____

CK: NEW / EXISTING (Circle One)

GRID: LESS THAN 400 SQ. FT.
GRID: BETWEEN 401 & 9,999 SQ. FT. (ACCEPTABLE @ 7,999 SQ. FT.)
10 GRID: 10,000 SQ. FT. OR MORE (ACCEPTABLE @ 8,000 SQ. FT.)

Turnkey Roof Consulting Inc.

Surpassing Expectations

SQ: _____

LENGTH: _____

WIDTH: _____

HEIGHT: _____

ROOF SYSTEM: _____

DECK: Concrete Steel Wood Other (Circle One)

NOTES: _____

ROOF AREA

Roof 10

N

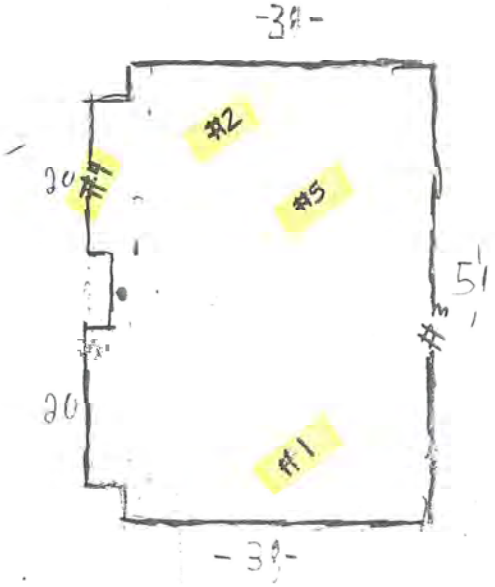

#1-2 fields
#3-4 - Wall flashing
#5 - Pitch-Pan

* Components *

Modified
Perlite
Fiber-board

Jonathan Clay

APPENDIX B

PLM Analytical Laboratory Results and Chain-of Custody

eurofins | Built Environment Testing

Report for:

Mr. Toi Akien, Florida Asbestos Consultant
Preemptive Strike Environmental Inspections, LLC
4454 Rende Lane
Lake Worth, FL 33461

Regarding: Eurofins Built Environment Testing East, LLC
Project: TRK260129; Broward Health Imperial Point
EML ID: 4395464

Approved by:

Dates of Analysis:
Asbestos PLM: 02-03-2026



Approved Signatory
Tran Annie Nguyen

Service SOPs: Asbestos PLM (EPA 40CFR App E to Sub E of Part 763 & EPA 600/R-93-116, EBET-PLM-SOP83921)
NVLAP Lab Code 600274-0

All samples were received in acceptable condition unless noted in the Report Comments portion in the body of the report. The results relate only to the samples as received and tested. The results include an inherent uncertainty of measurement associated with estimating percentages by polarized light microscopy. Measurement uncertainty data for sample results with >1% asbestos concentration can be provided when requested.

Eurofins Built Environment Testing East, LLC ("the Company"), a member of the Eurofins Built Environment Testing group of companies, shall have no liability to the client or the client's customer with respect to decisions or recommendations made, actions taken or courses of conduct implemented by either the client or the client's customer as a result of or based upon the Test Results. In no event shall the Company be liable to the client with respect to the Test Results except for the Company's own willful misconduct or gross negligence nor shall the Company be liable for incidental or consequential damages or lost profits or revenues to the fullest extent such liability may be disclaimed by law, even if the Company has been advised of the possibility of such damages, lost profits or lost revenues. In no event shall the Company's liability with respect to the Test Results exceed the amount paid to the Company by the client therefor.

Eurofins Built Environment Testing East, LLC
324 Newburyport Ave, Altamonte Springs, FL 32701
(866) 871-1984 www.eurofinsus.com/Built

Client: Preemptive Strike Environmental Inspections, LLC
C/O: Mr. Toi Akien, Florida Asbestos Consultant
Re: TRK260129; Broward Health Imperial Point

Date of Sampling: 01-23-2026
Date of Receipt: 01-29-2026
Date of Report: 02-03-2026

ASBESTOS PLM REPORT

Total Samples Submitted:	12
Total Samples Analyzed:	12
Total Samples with Layer Asbestos Content > 1%:	0

Location: A1, Asphalt Ply/Felt/Brown Ins

Lab ID-Version‡: 22042074-1

Sample Layers	Asbestos Content
Black Asphalt	ND
Black Felt	ND
Brown Insulation	ND
Composite Non-Asbestos Content:	40% Glass Fibers 20% Cellulose 10% Mineral Wool
Sample Composite Homogeneity:	Moderate

Location: A2, Asphalt Ply/Felt/Brown Ins

Lab ID-Version‡: 22042075-1

Sample Layers	Asbestos Content
Black Asphalt	ND
Black Felt	ND
Brown Insulation	ND
Composite Non-Asbestos Content:	40% Glass Fibers 20% Cellulose 10% Mineral Wool
Sample Composite Homogeneity:	Moderate

Location: A3, White Coating/Asphalt Ply/Felt

Lab ID-Version‡: 22042076-1

Sample Layers	Asbestos Content
White Coating	ND
Black Asphalt	ND
Black Felt	ND
Brown Fibrous Material	ND
Composite Non-Asbestos Content:	40% Glass Fibers 20% Cellulose
Sample Composite Homogeneity:	Moderate

The test report shall not be reproduced except in full, without written approval of the laboratory. The report must not be used by the client to claim product certification, approval, or endorsement by NVLAP, NIST, or any agency of the federal government. The Company reserves the right to dispose of all samples after a period of thirty (30) days, according to all state and federal guidelines, unless otherwise specified.

All components not quantified as asbestos content and non-asbestos content are considered to be non-fibrous matrix components. Matrix components may include, but are not limited to, gypsum, paint, silicate minerals, vinyl, binder, calcium carbonate, tar, and foam.

Inhomogeneous samples are separated into homogeneous subsamples and analyzed individually. ND means no fibers were detected. When detected, the minimum detection and reporting limit is less than 1% unless point counting is performed. Floor tile samples may contain large amounts of interference material and it is recommended that the sample be analyzed by gravimetric point count analysis to lower the detection limit and to aid in asbestos identification.
‡ A "Version" indicated by -"x" after the Lab ID# with a value greater than 1 indicates a sample with amended data. The revision number is reflected by the value of "x".

Eurofins Built Environment Testing East, LLC
324 Newburyport Ave, Altamonte Springs, FL 32701
(866) 871-1984 www.eurofinsus.com/Built

Client: Preemptive Strike Environmental Inspections, LLC
C/O: Mr. Toi Akien, Florida Asbestos Consultant
Re: TRK260129; Broward Health Imperial Point

Date of Sampling: 01-23-2026
Date of Receipt: 01-29-2026
Date of Report: 02-03-2026

ASBESTOS PLM REPORT

Location: A4, White Coating/Asphalt Ply/Felt

Lab ID-Version‡: 22042077-1

Sample Layers	Asbestos Content
Black Asphalt	ND
Black Felt	ND
Composite Non-Asbestos Content:	40% Glass Fibers
Sample Composite Homogeneity:	Moderate

Location: A5, Black Pitch

Lab ID-Version‡: 22042078-1

Sample Layers	Asbestos Content
Black Roofing Material	ND
Sample Composite Homogeneity:	Good

Location: B1, White Coating/Foam/Asphalt Ply/Felt

Lab ID-Version‡: 22042079-1

Sample Layers	Asbestos Content
White Coating	ND
Yellow Foam	ND
Green Foam	ND
Black Asphalt	ND
Black Felt	ND
Composite Non-Asbestos Content:	20% Glass Fibers 10% Cellulose
Sample Composite Homogeneity:	Moderate

The test report shall not be reproduced except in full, without written approval of the laboratory. The report must not be used by the client to claim product certification, approval, or endorsement by NVLAP, NIST, or any agency of the federal government. The Company reserves the right to dispose of all samples after a period of thirty (30) days, according to all state and federal guidelines, unless otherwise specified.

All components not quantified as asbestos content and non-asbestos content are considered to be non-fibrous matrix components. Matrix components may include, but are not limited to, gypsum, paint, silicate minerals, vinyl, binder, calcium carbonate, tar, and foam.

Inhomogeneous samples are separated into homogeneous subsamples and analyzed individually. ND means no fibers were detected. When detected, the minimum detection and reporting limit is less than 1% unless point counting is performed. Floor tile samples may contain large amounts of interference material and it is recommended that the sample be analyzed by gravimetric point count analysis to lower the detection limit and to aid in asbestos identification.
‡ A "Version" indicated by -"x" after the Lab ID# with a value greater than 1 indicates a sample with amended data. The revision number is reflected by the value of "x".

Eurofins Built Environment Testing East, LLC
324 Newburyport Ave, Altamonte Springs, FL 32701
(866) 871-1984 www.eurofinsus.com/Built

Client: Preemptive Strike Environmental Inspections, LLC
C/O: Mr. Toi Akien, Florida Asbestos Consultant
Re: TRK260129; Broward Health Imperial Point

Date of Sampling: 01-23-2026
Date of Receipt: 01-29-2026
Date of Report: 02-03-2026

ASBESTOS PLM REPORT

Location: B2, White Coating/Foam/Asphalt Ply/Felt

Lab ID-Version‡: 22042080-1

Sample Layers	Asbestos Content
White Coating	ND
Yellow Foam	ND
Green Foam	ND
Black Asphalt	ND
Black Felt	ND
Brown/White Non-Fibrous Material	ND
Composite Non-Asbestos Content:	20% Glass Fibers 10% Cellulose
Sample Composite Homogeneity:	Moderate

Location: B3, White Coating/Foam

Lab ID-Version‡: 22042081-1

Sample Layers	Asbestos Content
White Coating	ND
Yellow Foam	ND
Sample Composite Homogeneity:	Moderate

Location: B4, White Coating/Foam/Asphalt Ply/Felt

Lab ID-Version‡: 22042082-1

Sample Layers	Asbestos Content
White Coating	ND
Yellow Foam	ND
Sample Composite Homogeneity:	Moderate

Location: B5, White Coating/Foam/Asphalt Ply/Felt

Lab ID-Version‡: 22042083-1

Sample Layers	Asbestos Content
Black Asphalt	ND
Black Felt	ND
Composite Non-Asbestos Content:	20% Glass Fibers
Sample Composite Homogeneity:	Moderate

The test report shall not be reproduced except in full, without written approval of the laboratory. The report must not be used by the client to claim product certification, approval, or endorsement by NVLAP, NIST, or any agency of the federal government. The Company reserves the right to dispose of all samples after a period of thirty (30) days, according to all state and federal guidelines, unless otherwise specified.

All components not quantified as asbestos content and non-asbestos content are considered to be non-fibrous matrix components. Matrix components may include, but are not limited to, gypsum, paint, silicate minerals, vinyl, binder, calcium carbonate, tar, and foam.

Inhomogeneous samples are separated into homogeneous subsamples and analyzed individually. ND means no fibers were detected. When detected, the minimum detection and reporting limit is less than 1% unless point counting is performed. Floor tile samples may contain large amounts of interference material and it is recommended that the sample be analyzed by gravimetric point count analysis to lower the detection limit and to aid in asbestos identification.
‡ A "Version" indicated by -"x" after the Lab ID# with a value greater than 1 indicates a sample with amended data. The revision number is reflected by the value of "x".

Eurofins Built Environment Testing East, LLC
324 Newburyport Ave, Altamonte Springs, FL 32701
(866) 871-1984 www.eurofinsus.com/Built

Client: Preemptive Strike Environmental Inspections, LLC
C/O: Mr. Toi Akien, Florida Asbestos Consultant
Re: TRK260129; Broward Health Imperial Point

Date of Sampling: 01-23-2026
Date of Receipt: 01-29-2026
Date of Report: 02-03-2026

ASBESTOS PLM REPORT

Location: B6, White Coating/Foam

Lab ID-Version‡: 22042084-1

Sample Layers	Asbestos Content
White Coating	ND
Yellow Foam	ND
Sample Composite Homogeneity:	Moderate

Location: B7, White Coating/Foam

Lab ID-Version‡: 22042085-1

Sample Layers	Asbestos Content
White Coating	ND
Yellow Foam	ND
Sample Composite Homogeneity:	Moderate

The test report shall not be reproduced except in full, without written approval of the laboratory. The report must not be used by the client to claim product certification, approval, or endorsement by NVLAP, NIST, or any agency of the federal government. The Company reserves the right to dispose of all samples after a period of thirty (30) days, according to all state and federal guidelines, unless otherwise specified.

All components not quantified as asbestos content and non-asbestos content are considered to be non-fibrous matrix components. Matrix components may include, but are not limited to, gypsum, paint, silicate minerals, vinyl, binder, calcium carbonate, tar, and foam.

Inhomogeneous samples are separated into homogeneous subsamples and analyzed individually. ND means no fibers were detected. When detected, the minimum detection and reporting limit is less than 1% unless point counting is performed. Floor tile samples may contain large amounts of interference material and it is recommended that the sample be analyzed by gravimetric point count analysis to lower the detection limit and to aid in asbestos identification.
‡ A "Version" indicated by -"x" after the Lab ID# with a value greater than 1 indicates a sample with amended data. The revision number is reflected by the value of "x".

Eurofins Built Environment Testing East, LLC
324 Newburyport Ave, Altamonte Springs, FL 32701
(866) 871-1984 www.eurofinsus.com/Built

Client: Preemptive Strike Environmental Inspections, LLC
C/O: Mr. Toi Akien, Florida Asbestos Consultant
Re: TRK260129; Broward Health Imperial Point

Date of Sampling: 01-23-2026
Date of Receipt: 01-29-2026
Date of Report: 02-03-2026

ASBESTOS PLM REPORT

PROJECT ANALYST AND SIGNATORY REPORT

Project Analyst



Analyst: Blossom Lee

The test report shall not be reproduced except in full, without written approval of the laboratory. The report must not be used by the client to claim product certification, approval, or endorsement by NVLAP, NIST, or any agency of the federal government. The Company reserves the right to dispose of all samples after a period of thirty (30) days, according to all state and federal guidelines, unless otherwise specified.

‡ A "Version" indicated by -"x" after the Lab ID# with a value greater than 1 indicates a sample with amended data. The revision number is reflected by the value of "x".

CHAIN OF CUSTODY

www.eurofinsus.com/Built

eurofins | Built Environment Testing

East: (866) 871-1984
Central: (800) 651-4802
West: (866) 888-6653

004395464

ASBESTOS A

CONTACT INFORMATION

Company:	Preemptive Strike Environmental Insp.	Address: 1313 W. Boynton Beach Boulevard, Boynton Beach, FL. 33426	
Contact:	Toi Akien	Special Instructions:	
Phone:	(561) 515 - 0091		

PROJECT INFORMATION

Project ID:	TRK260129		
Project Description:	BROWARD HEALTH IMPERIAL POINT		
Project Zip Code:	33308	Sampling Date & Time:	1/23/26
PO Number:		Sampled By:	JC

TURN AROUND TIME CODES (TAT)

STD – Standard (DEFAULT)
ND – Next Business Day
SD – Same Business Day Rush*
*Please call Client Services for locations with Rush services

Rushes received after 2pm or on weekends, will be considered received the next business day. Please alert us in advance of weekend analysis needs.

REQUESTED SERVICES (Check boxes below)

Sample ID	Description	Sample Type (Below)	TAT (Above)	Total Volume (Air Samples only)	Notes	PCM Air: Fiber Count (NIOSH 7400)	PCM Air: OSHA with TWA	PLM Bulk: Asbestos Bulk PLM	PLM Bulk: EPA Point Count (200 Point Count)	PLM Bulk: EPA Point Count (400 Point Count)	PLM Bulk: EPA Point Count (1000 Point Count)	PLM Bulk: Gravimetric Point Count (400 Pt Count)	PLM Bulk: Gravimetric Point Count (1000 Pt Count)	Rock & Soil: CARB 435 Method (400 Point Count)	Rock & Soil: CARB 435 Method (1000 Point Count)	Other Requests: Lead Analysis – Flame AA	Other Requests	Other Requests
A1 - A2	ASPHALT PLY / FELT / BRown INS	BULK	STD		ROOF 10 - FIELD	☐	☐	☑	☐	☐	☐	☐	☐	☐	☐	☐	☐	☐
A3 - A4	WHITE COATING / ASPHALT PLY / FELT				- FLASHING	☐	☐	☑	☐	☐	☐	☐	☐	☐	☐	☐	☐	☐
A5	BLACK PITCH				- PITCH POCK	☐	☐	☑	☐	☐	☐	☐	☐	☐	☐	☐	☐	☐
B1 - B2	WHITE COATING / FOAM / ASPHALT PLY / FELT				ROOF 9 - FIELD	☐	☐	☑	☐	☐	☐	☐	☐	☐	☐	☐	☐	☐
B3	WHITE COATING / FOAM				- PITCH POCK	☐	☐	☑	☐	☐	☐	☐	☐	☐	☐	☐	☐	☐
B4 - B5	WHITE COATING / FOAM / ASPHALT				- FLASHING	☐	☐	☑	☐	☐	☐	☐	☐	☐	☐	☐	☐	☐
B6 - B7	WHITE COATING / FOAM				- FLASHING	☐	☐	☑	☐	☐	☐	☐	☐	☐	☐	☐	☐	☐
						☐	☐	☐	☐	☐	☐	☐	☐	☐	☐	☐	☐	☐
						☐	☐	☐	☐	☐	☐	☐	☐	☐	☐	☐	☐	☐
						☐	☐	☐	☐	☐	☐	☐	☐	☐	☐	☐	☐	☐
						☐	☐	☐	☐	☐	☐	☐	☐	☐	☐	☐	☐	☐

SAMPLE TYPE CODES

A – Air	W – Wipe
B – Bulk	T – Tape
D – Dust	R – Rock
SO – Soil	O – Other:

RELINQUISHED BY	DATE & TIME	RECEIVED BY	DATE & TIME
Toi A. Akien	1/29/26	Williams Eurofins	1/29/26 4:37p
		B. DeRosa	2/3/26 10:45

By submitting this Chain of Custody, you agree to be bound by the terms and conditions set forth at: https://www.eurofinsus.com/environment-testing/built-environment/resources/sampling-guides-and-forms/

Copyright © 2022 Eurofins EPK Built Environment Testing, LLC

APPENDIX C

Certifications

UF | TREEO Center
UNIVERSITY of FLORIDA

Center for Training, Research and Education for Environmental Occupations

certifies

Jonathan Clay

5500 NW 2nd Ave, Apt 523 Boca Raton, FL 33487

Having passed a 25-question exam with a score of 70% or higher has successfully met training requirements for

Asbestos Refresher: Inspector

FDBPR Asbestos Licensing Unit: Provider #0000995; Course #FL49-0004731 (½ Day; 3.40 Contact Hours)

(Reaccreditation for Inspector under TSCA Title II/AHERA)

Conducted

11/21/2025

Certificate #: 0078 - 028-44701
Exam Date: 11/21/2025
EPA accreditation expires: 11/21/2026
Principal Instructor: Brian Duchene, PE, LAC
CEUs: .4
FBPR LAC: #0000995; Course #0004731
FBPE CEHs: #0004021; Course #0009083/Educational Institutions: 4 CEHs
AL Safe State: Teacher name on roster

Andrew Campbell, Director

Ron DeSantis, Governor

Melanie S. Griffin, Secretary

STATE OF FLORIDA
DEPARTMENT OF BUSINESS AND PROFESSIONAL REGULATION

ASBESTOS LICENSING UNIT

THE ASBESTOS BUSINESS ORGANIZATION HEREIN IS LICENSED UNDER THE
PROVISIONS OF CHAPTER 469, FLORIDA STATUTES

PREEMPTIVE STRIKE ENVIRONMENTAL INSPECTIONS, LLC

TOI A AKIEN
4454 RENDE LANE
LAKE WORTH FL 33461

LICENSE NUMBER: ZA509

EXPIRATION DATE: NOVEMBER 30, 2027

Always verify licenses online at MyFloridaLicense.com

ISSUED: 08/11/2025

Do not alter this document in any form.

This is your license. It is unlawful for anyone other than the licensee to use this document.

Ron DeSantis, Governor

Melanie S. Griffin, Secretary

STATE OF FLORIDA
DEPARTMENT OF BUSINESS AND PROFESSIONAL REGULATION

ASBESTOS LICENSING UNIT

THE ASBESTOS CONSULTANT HEREIN IS LICENSED UNDER THE
PROVISIONS OF CHAPTER 469, FLORIDA STATUTES

AKIEN, TOI A

PREEMPTIVE STRIKE ENVIRONMENTAL INSPECTIONS, LLC
4454 RENDE LANE
LAKE WORTH FL 33461

LICENSE NUMBER: AX98

EXPIRATION DATE: NOVEMBER 30, 2026

Always verify licenses online at MyFloridaLicense.com

ISSUED: 09/05/2024

Do not alter this document in any form.

This is your license. It is unlawful for anyone other than the licensee to use this document.

Turnkey Roof Consulting Inc.

January 27, 2026

C/O Mr. Ricardo Moncada
RMS Building Envelope Consultants
1451 W Cypress Road
Fort Lauderdale, Florida 33309

Project: Broward Health Imperial Point
Roof Area 9
6401 Federal Highway
Fort Lauderdale, Florida 33308

Reference: Drainage Evaluation

File: 26-031 Roof Drainage Broward Health Imperial Point 9.dc

Mr. Ricardo Moncada

At your request, our office has completed an evaluation of the roof drainage of the above-referenced building. The primary roof drainage on the roof is currently achieved using five (5) existing 4" primary internal drains and eleven (11) 7" wide by 7" high through-wall scuppers.

All primary and secondary elements were evaluated for compliance with Chapter 11 of the 2023 edition of the Florida Building Code, plumbing volume based on a design rainfall rate of 5” per hour, utilizing a 30 pound per square foot live load. Based on the 2023 Florida Building Code Plumbing volume the drainage capacity Area of a 4" roof drain is gallons per minute. This figure is converted to square footage by the standard conversion calculation 180 GPM /5”/0.0104 = 3,465 square feet per 4” diameter roof drain. Secondary through-wall overflow scuppers have been evaluated using the Francis Formula Q = 3.33 * (L – 0.2 * H)*1.5 ^ H and converted to GPM.

The tributary drainage and total rainfall accumulation from contributing roof areas were combined with half of all vertical wall areas were added to the total square footage of the specific roof area in accordance with the 2023 Florida Building Code (Plumbing Edition) Chapter 11, per section 1106.4 – Vertical Walls.

The drainage elements, sizes and general locations will be identified on the site drawing included in this report.

Based on the above drainage capacities, the following is our evaluation of Roof 9 of Broward Health Imperial Point:

3260 NW 23rd Avenue ~ Suite 300E ~ Pompano Beach, FL 33069 ~ Office 954-978-9330 ~ Fax 954-978-9339
mike@turnkeyroofconsulting.com

Turnkey Roof Consulting Inc.

Roof Area 9
Primary Drainage

Total Roof Area:	10,334	sq.ft.
Wall Area:	7,950	sq.ft.
Contributing Area from Adjacent Roof Area:	17,983	sq.ft.
Total Area:	36,267	sq.ft.

Enlarge at Least Two Scuppers to 16" x 4" Minimum

Capacity of Primary Drainage:	1- 4" Internal Drain	180 GPM ea.	x	5	=	900 GPM
	2- 7" W x 7" H Scupper at 2.5" Head=	77 GPM ea.	x	9	=	693 GPM
	3- 16" W x 4" H Scupper at 2.5" Head=	183 GPM ea.	x	2	=	366 GPM
Total Drainage Capacity:					=	1959 GPM

Primary Drainage
is Adaquate (1959 > 1886) GPM

Roof Area 9
Secondary Drainage

Total Roof Area:	10,334	sq.ft.
Wall Area:	7,950	sq.ft.
Contributing Area from Adjacent Roof Area:	17,983	sq.ft.
Total Area:	36,267	sq.ft.

Construct Ten 18" x 4" Minimum Overflow Scuppers

Capacity of Secondary Drainage:	1- 18" W x 4" H Scupper at 2.5" Head=	207 GPM ea.	x	10	=	2070 GPM

Secondary Drainage
is Adaquate (2070 > 1886) GPM

CONCLUSIONS
Primary and Secondary Drainage of
Roof Area 9
has been Evaluated and determined to be Adequate after listed adjustments

3260 NW 23rd Avenue ~ Suite 300E ~ Pompano Beach, FL 33069 ~ Office 954-978-9330 ~ Fax 954-978-9339
mike@turnkeyroofconsulting.com

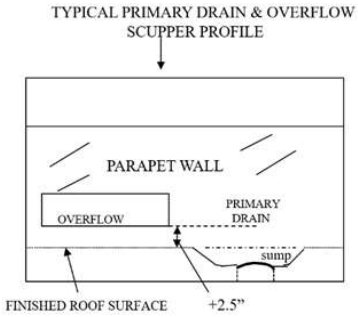

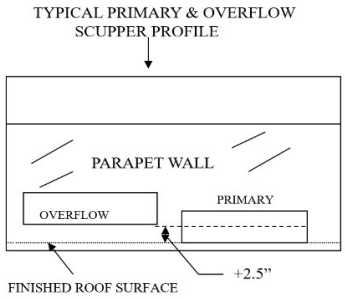

Ensure the invert of the overflow scuppers are adjusted to be not more than 2.5" above the primary scupper invert as indicated in this report, this will ensure the depth of water on the roof cannot exceed 5" in the event the primary drainage system becomes obstructed. Additionally, the scupper sizes specified are finished scupper sizes; increase the size of the rough opening through the parapet structure as necessary to account for scupper opening restriction caused by installation materials. In all cases, ensure the minimum scupper size specified. See attached roof drawing for primary and secondary component general placements for the specific roof area.
As required by the Florida Building Code, these calculations are produced considering the sufficient capacity of the secondary drainage elements with all primary roof drains deemed to be obstructed. These drainage calculations do not include an analysis of the below roof deck horizontal drainage piping.
Note: The use of any new or existing retrofit primary drain inserts is prohibited due to restrictions in flow rates caused by interior expansion grommets. Drainage information based on information provided by client.

This report addresses the issues concerning the roof drainage for
Roof Area 9 of Broward Health Imperial Point
If there are any future questions, please call me at 954-978-9330.

Regards,



Michael Crooks
Consultant

3260 NW 23rd Avenue ~ Suite 300E ~ Pompano Beach, FL 33069 ~ Office 954-978-9330 ~ Fax 954-978-9339
mike@turnkeyroofconsulting.com

RMS Building Envelope Consultants
1451 W Cypress Road
Fort Lauderdale, Florida 33309

Broward Health Imperial Point
6401 Federal Highway
Fort Lauderdale, Florida 33308

Roof Area 9

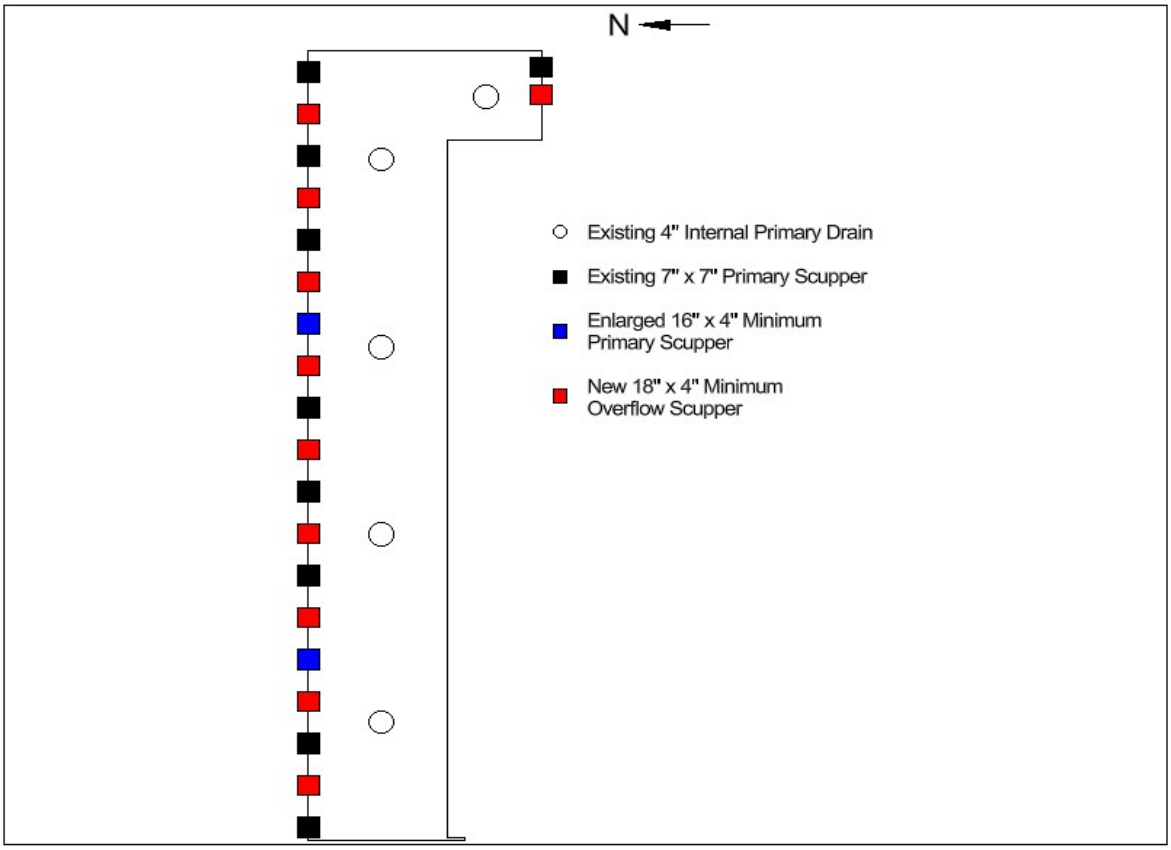

*Note: The drainage plan layout is a suggestion based on information gathered during the survey. As long as the amount and size of drainage components remains consistent with those specified within this report, the locations of new components can be altered to fit requirements the author of this report is not aware of. Ensure all static and hydraulic head conditions are met as specified.

3260 NW 23rd Avenue ~ Suite 300E ~ Pompano Beach, FL 33069 ~ Office 954-978-9330 ~ Fax 954-978-9339
mike@turnkeyroofconsulting.com

Turnkey Roof Consulting Inc.

January 27, 2026

C/O Mr. Ricardo Moncada
RMS Building Envelope Consultants
1451 W Cypress Road
Fort Lauderdale, Florida 33309

Project: Broward Health Imperial Point
Roof Area 10
6401 Federal Highway
Fort Lauderdale, Florida 33308

Reference: Drainage Evaluation

File: 26-031 Roof Drainage Broward Health Imperial Point 10.dc

Mr. Ricardo Moncada

At your request, our office has completed an evaluation of the roof drainage of the above-referenced building. The primary roof drainage on the roof is currently achieved using one (5) existing 4" primary internal drain.

All primary and secondary elements were evaluated for compliance with Chapter 11 of the 2023 edition of the Florida Building Code, plumbing volume based on a design rainfall rate of 5” per hour, utilizing a 30 pound per square foot live load. Based on the 2023 Florida Building Code Plumbing volume the drainage capacity Area of a 4" roof drain is gallons per minute. This figure is converted to square footage by the standard conversion calculation 180 GPM /5”/0.0104 = 3,465 square feet per 4” diameter roof drain. Secondary through-wall overflow scuppers have been evaluated using the Francis Formula Q = 3.33 * (L – 0.2 * H)*1.5 ^ H and converted to GPM.

The tributary drainage and total rainfall accumulation from contributing roof areas were combined with half of all vertical wall areas were added to the total square footage of the specific roof area in accordance with the 2023 Florida Building Code (Plumbing Edition) Chapter 11, per section 1106.4 – Vertical Walls.

The drainage elements, sizes and general locations will be identified on the site drawing included in this report.

Based on the above drainage capacities, the following is our evaluation of Roof 9 of Broward Health Imperial Point:

3260 NW 23rd Avenue ~ Suite 300E ~ Pompano Beach, FL 33069 ~ Office 954-978-9330 ~ Fax 954-978-9339
mike@turnkeyroofconsulting.com

Turnkey Roof Consulting Inc.

Roof Area 10
Primary Drainage

Total Roof Area:	2,096	sq.ft.
Wall Area:	810	sq.ft.
Contributing Area from Adjacent Roof Area:	1,426	sq.ft.
Total Area:	4,331	sq.ft.

Construct One New 12" x 4" Minimum Primary Scupper

Capacity of Primary Drainage:	1- 4" Internal Drain	180 GPM ea. x	1 =	180 GPM
	3- 12" W x 4" H Scupper at 2.5" Head=	136 GPM ea. x	1 =	136 GPM
Total Drainage Capacity:			=	316 GPM

Primary Drainage
is Adaquate (316 > 225) GPM

Roof Area 10
Secondary Drainage

Total Roof Area:	2,096	sq.ft.
Wall Area:	810	sq.ft.
Contributing Area from Adjacent Roof Area:	1,426	sq.ft.
Total Area:	4,331	sq.ft.

Construct Two 12" x 4" Minimum Overflow Scuppers

Capacity of Secondary Drainage:	1- 12" W x 4" H Scupper at 2.5" Head=	136 GPM ea. x	2 =	272 GPM

Secondary Drainage
is Adaquate (272 > 225) GPM

CONCLUSIONS
Primary and Secondary Drainage of
Roof Area 10
has been Evaluated and determined to be Adequate after listed adjustments

3260 NW 23rd Avenue ~ Suite 300E ~ Pompano Beach, FL 33069 ~ Office 954-978-9330 ~ Fax 954-978-9339
mike@turnkeyroofconsulting.com

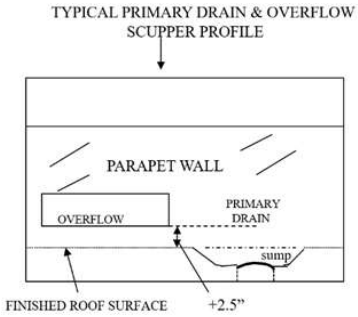

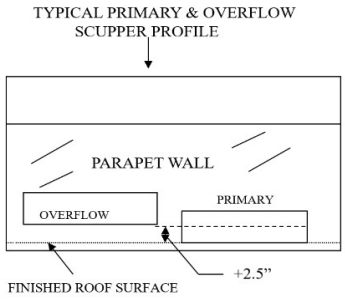

Ensure the invert of the overflow scuppers are adjusted to be not more than 2.5" above the primary scupper invert as indicated in this report, this will ensure the depth of water on the roof cannot exceed 5" in the event the primary drainage system becomes obstructed. Additionally, the scupper sizes specified are finished scupper sizes; increase the size of the rough opening through the parapet structure as necessary to account for scupper opening restriction caused by installation materials. In all cases, ensure the minimum scupper size specified. See attached roof drawing for primary and secondary component general placements for the specific roof area.
As required by the Florida Building Code, these calculations are produced considering the sufficient capacity of the secondary drainage elements with all primary roof drains deemed to be obstructed. These drainage calculations do not include an analysis of the below roof deck horizontal drainage piping.
Note: The use of any new or existing retrofit primary drain inserts is prohibited due to restrictions in flow rates caused by interior expansion grommets. Drainage information based on information provided by client.

This report addresses the issues concerning the roof drainage for
Roof Area 10 of Broward Health Imperial Point
If there are any future questions, please call me at 954-978-9330.

Regards,



Michael Crooks
Consultant

3260 NW 23rd Avenue ~ Suite 300E ~ Pompano Beach, FL 33069 ~ Office 954-978-9330 ~ Fax 954-978-9339
mike@turnkeyroofconsulting.com

Turnkey Roof Consulting Inc.

RMS Building Envelope Consultants
1451 W Cypress Road
Fort Lauderdale, Florida 33309

Broward Health Imperial Point
6401 Federal Highway
Fort Lauderdale, Florida 33308

Roof Area 10

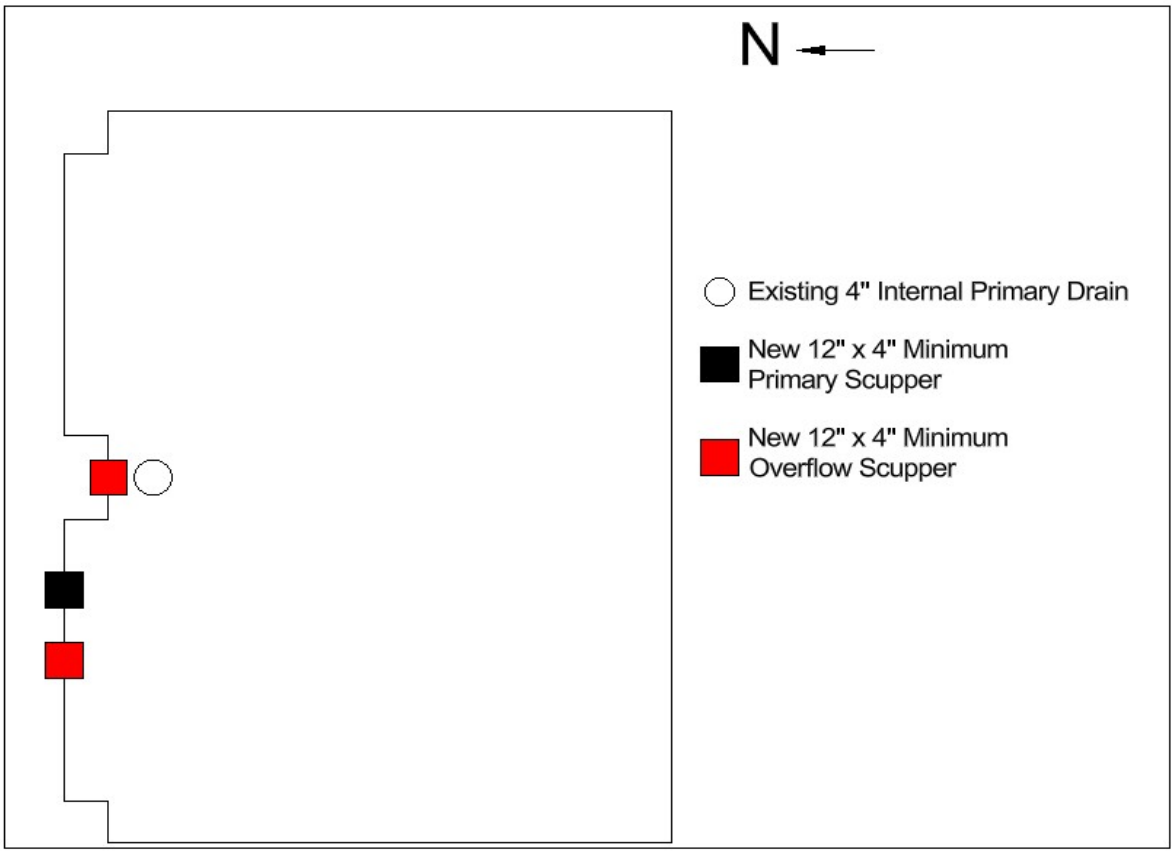

*Note: The drainage plan layout is a suggestion based on information gathered during the survey. As long as the amount and size of drainage components remains consistent with those specified within this report, the locations of new components can be altered to fit requirements the author of this report is not aware of. Ensure all static and hydraulic head conditions are met as specified.

3260 NW 23rd Avenue ~ Suite 300E ~ Pompano Beach, FL 33069 ~ Office 954-978-9330 ~ Fax 954-978-9339
mike@turnkeyroofconsulting.com

Turnkey Roof Consulting Inc.

April 30, 2025

C/O Mr. Ricardo Moncada
RMS Building Envelope Consultants
1451 W Cypress Road
Fort Lauderdale, Florida 33309

Project: Broward Health Imperial Point
Roof Area 1
6401 Federal Highway
Fort Lauderdale, Florida 33308

Reference: Drainage Evaluation

File: 24-123 Roof Drainage Broward Health Imperial Point 1.dc

Mr. Ricardo Moncada

At your request, our office has completed an evaluation of the roof drainage of the above-referenced building. The primary roof drainage on the roof is currently achieved using five (5) existing 6" primary internal drains.

All primary and secondary elements were evaluated for compliance with Chapter 11 of the 2023 edition of the Florida Building Code, plumbing volume based on a design rainfall rate of 5” per hour, utilizing a 30 pound per square foot live load. Based on the 2023 Florida Building Code Plumbing volume the drainage capacity Area of a 6" roof drain is gallons per minute. This figure is converted to square footage by the standard conversion calculation 538 GPM /5”/0.0104 = 10,357 square feet per 6” diameter roof drain. Secondary through-wall overflow scuppers have been evaluated using the Francis Formula Q = 3.33 * (L – 0.2 * H)*1.5 ^ H and converted to GPM.

The tributary drainage and total rainfall accumulation from contributing roof areas were combined with half of all vertical wall areas were added to the total square footage of the specific roof area in accordance with the 2023 Florida Building Code (Plumbing Edition) Chapter 11, per section 1106.4 – Vertical Walls.

The drainage elements, sizes and general locations will be identified on the site drawing included in this report.

Based on the above drainage capacities, the following is our evaluation of Roof 1 of Broward Health Imperial Point:

3260 NW 23rd Avenue ~ Suite 300E ~ Pompano Beach, FL 33069 ~ Office 954-978-9330 ~ Fax 954-978-9339
mike@turnkeyroofconsulting.com

Turnkey Roof Consulting Inc.

Roof Area 1
Primary Drainage

Total Roof Area:	17,388	sq.ft.
Wall Area:	595	sq.ft.
Total Area:	17,983	sq.ft.

Capacity of Primary Drainage: 1- 6" Internal Drain 538 GPM ea. x 5 = 2690 GPM

Primary Drainage
is Adaquate (2690 > 935) GPM

Roof Area 1
Secondary Drainage

Total Roof Area:	17,388	sq.ft.
Wall Area:	595	sq.ft.
Total Area:	17,983	sq.ft.

Seconday Drainage Drains to Eave on Northwest Side of Roof

CONCLUSIONS
Primary and Secondary Drainage of
Roof Area 1
has been Evaluated and determined to be Adequate after listed adjustments

3260 NW 23rd Avenue ~ Suite 300E ~ Pompano Beach, FL 33069 ~ Office 954-978-9330 ~ Fax 954-978-9339
mike@turnkeyroofconsulting.com

Turnkey Roof Consulting Inc.

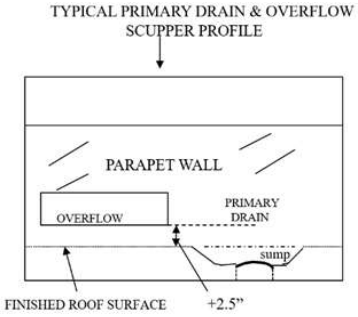

Ensure the invert of the overflow scuppers are adjusted to be not more than 2.5" above the primary scupper invert as indicated in this report, this will ensure the depth of water on the roof cannot exceed 5" in the event the primary drainage system becomes obstructed. Additionally, the scupper sizes specified are finished scupper sizes; increase the size of the rough opening through the parapet structure as necessary to account for scupper opening restriction caused by installation materials. In all cases, ensure the minimum scupper size specified. See attached roof drawing for primary and secondary component general placements for the specific roof area.
As required by the Florida Building Code, these calculations are produced considering the sufficient capacity of the secondary drainage elements with all primary roof drains deemed to be obstructed. These drainage calculations do not include an analysis of the below roof deck horizontal drainage piping.
Note: The use of any new or existing retrofit primary drain inserts is prohibited due to restrictions in flow rates caused by interior expansion grommets. Drainage information based on information provided by client.

This report addresses the issues concerning the roof drainage for
Roof Area 1 of Broward Health Imperial Point
If there are any future questions, please call me at 954-978-9330.

Regards,



Michael Crooks
Consultant

3260 NW 23rd Avenue ~ Suite 300E ~ Pompano Beach, FL 33069 ~ Office 954-978-9330 ~ Fax 954-978-9339
mike@turnkeyroofconsulting.com

RMS Building Envelope Consultants
1451 W Cypress Road
Fort Lauderdale, Florida 33309

Broward Health Imperial Point
6401 Federal Highway
Fort Lauderdale, Florida 33308

Roof Area 1

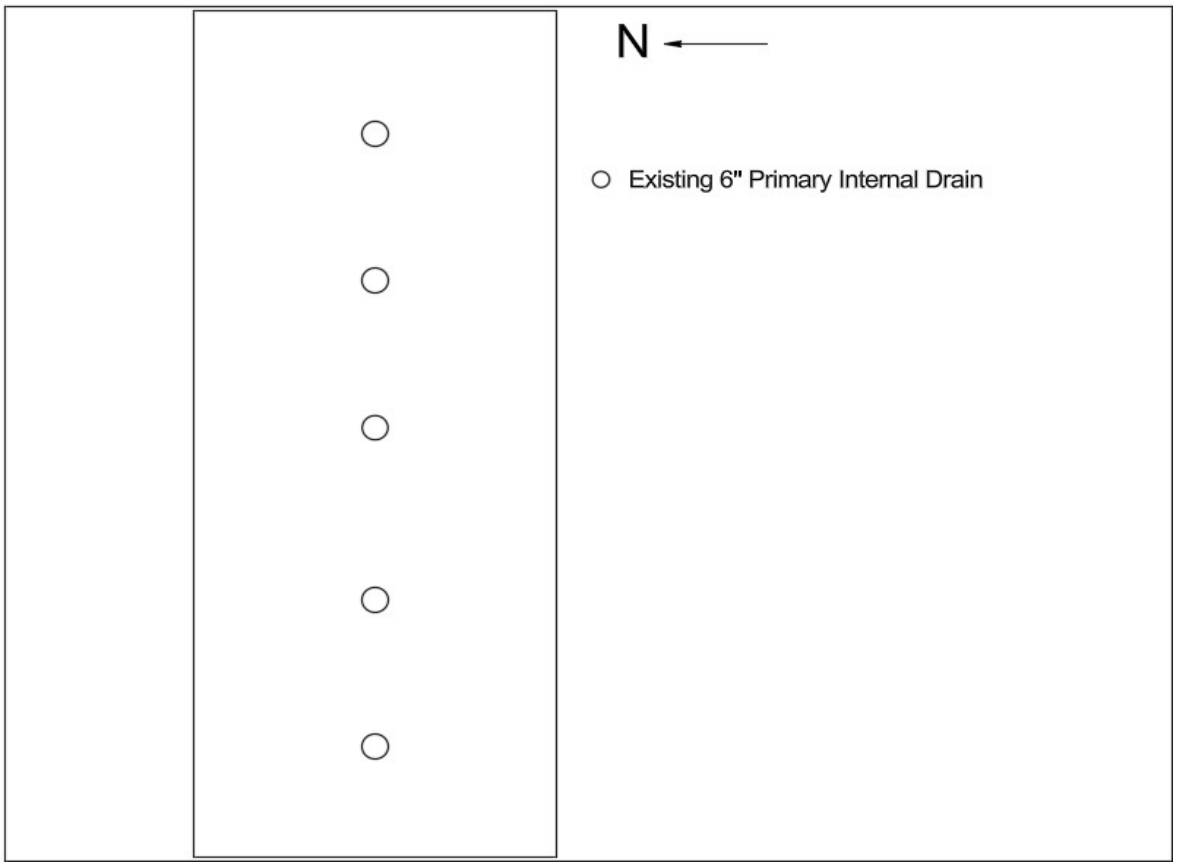

*Note: The drainage plan layout is a suggestion based on information gathered during the survey. As long as the amount and size of drainage components remains consistent with those specified within this report, the locations of new components can be altered to fit requirements the author of this report is not aware of. Ensure all static and hydraulic head conditions are met as specified.

3260 NW 23rd Avenue ~ Suite 300E ~ Pompano Beach, FL 33069 ~ Office 954-978-9330 ~ Fax 954-978-9339
mike@turnkeyroofconsulting.com

Turnkey Roof Consulting Inc.

April 30, 2025

C/O Mr. Ricardo Moncada
RMS Building Envelope Consultants
1451 W Cypress Road
Fort Lauderdale, Florida 33309

Project: Broward Health Imperial Point
Roof Area 3
6401 Federal Highway
Fort Lauderdale, Florida 33308

Reference: Drainage Evaluation

File: 24-123 Roof Drainage Broward Health Imperial Point 3.dc

Mr. Ricardo Moncada

At your request, our office has completed an evaluation of the roof drainage of the above-referenced building. The primary roof drainage on the main roof is currently achieved using two (2) existing 5" wide by 4" high primary through-wall scuppers.

All primary and secondary elements were evaluated for compliance with Chapter 11 of the 2023 edition of the Florida Building Code, plumbing volume based on a design rainfall rate of 5” per hour, utilizing a 30 pound per square foot live load. Secondary through-wall overflow scuppers have been evaluated using the Francis Formula Q = 3.33 * (L – 0.2 * H)*1.5 ^ H and converted to GPM.

The tributary drainage and total rainfall accumulation from contributing roof areas were combined with half of all vertical wall areas were added to the total square footage of the specific roof area in accordance with the 2023 Florida Building Code (Plumbing Edition) Chapter 11, per section 1106.4 – Vertical Walls.

The drainage elements, sizes and general locations will be identified on the site drawing included in this report.

Based on the above drainage capacities, the following is our evaluation of Roof 3 of Broward Health Imperial Point:

3260 NW 23rd Avenue ~ Suite 300E ~ Pompano Beach, FL 33069 ~ Office 954-978-9330 ~ Fax 954-978-9339
mike@turnkeyroofconsulting.com

Turnkey Roof Consulting Inc.

Roof Area 3
Primary Drainage

Total Roof Area:	180	sq.ft.
Wall Area:	372	sq.ft.
Total Area:	552	sq.ft.

Capacity of Primary Drainage: 1- 5" x 4" Scupper at 2.5" Head = 53 GPM ea. x 2 = 106 GPM

Primary Drainage
is Adaquate (106 > 29) GPM

Roof Area 3
Secondary Drainage

Total Roof Area:	180	sq.ft.
Wall Area:	372	sq.ft.
Total Area:	552	sq.ft.

Construct Two New 4" x 4" Minimum Scuppers

Capacity of Secondary Drainage: 1- 4" x 4" Scupper at 2.5" Head= 41 GPM ea. x 2 = 82 GPM

Secondary Drainage
is Adaquate (82 > 29) GPM

CONCLUSIONS
Primary and Secondary Drainage of
Roof Area 3
has been Evaluated and determined to be Adequate after listed adjustments

3260 NW 23rd Avenue ~ Suite 300E ~ Pompano Beach, FL 33069 ~ Office 954-978-9330 ~ Fax 954-978-9339
mike@turnkeyroofconsulting.com

Turnkey Roof Consulting Inc.

TYPICAL PRIMARY & OVERFLOW
SCUPPER PROFILE

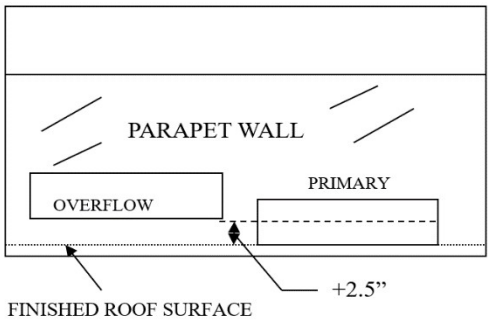

Ensure the invert of the overflow scuppers are adjusted to be not more than 2.5” above the primary scupper invert as indicated in this report, this will ensure the depth of water on the roof cannot exceed 5” in the event the primary drainage system becomes obstructed. Additionally, the scupper sizes specified are finished scupper sizes; increase the size of the rough opening through the parapet structure as necessary to account for scupper opening restriction caused by installation materials. In all cases, ensure the minimum scupper size specified. See attached roof drawing for primary and secondary component general placements for the specific roof area.
As required by the Florida Building Code, these calculations are produced considering the sufficient capacity of the secondary drainage elements with all primary roof drains deemed to be obstructed. These drainage calculations do not include an analysis of the below roof deck horizontal drainage piping.
Note: The use of any new or existing retrofit primary drain inserts is prohibited due to restrictions in flow rates caused by interior expansion grommets.

This report addresses the issues concerning the roof drainage for
Roof Area 3 of Broward Health Imperial Point
If there are any future questions, please call me at 954-978-9330.

Regards,

Michael Crooks
Consultant

3260 NW 23rd Avenue ~ Suite 300E ~ Pompano Beach, FL 33069 ~ Office 954-978-9330 ~ Fax 954-978-9339
mike@turnkeyroofconsulting.com

Turnkey Roof Consulting Inc.

RMS Building Envelope Consultants
1451 W Cypress Road
Fort Lauderdale, Florida 33309

Broward Health Imperial Point
6401 Federal Highway
Fort Lauderdale, Florida 33308

Roof Area 3

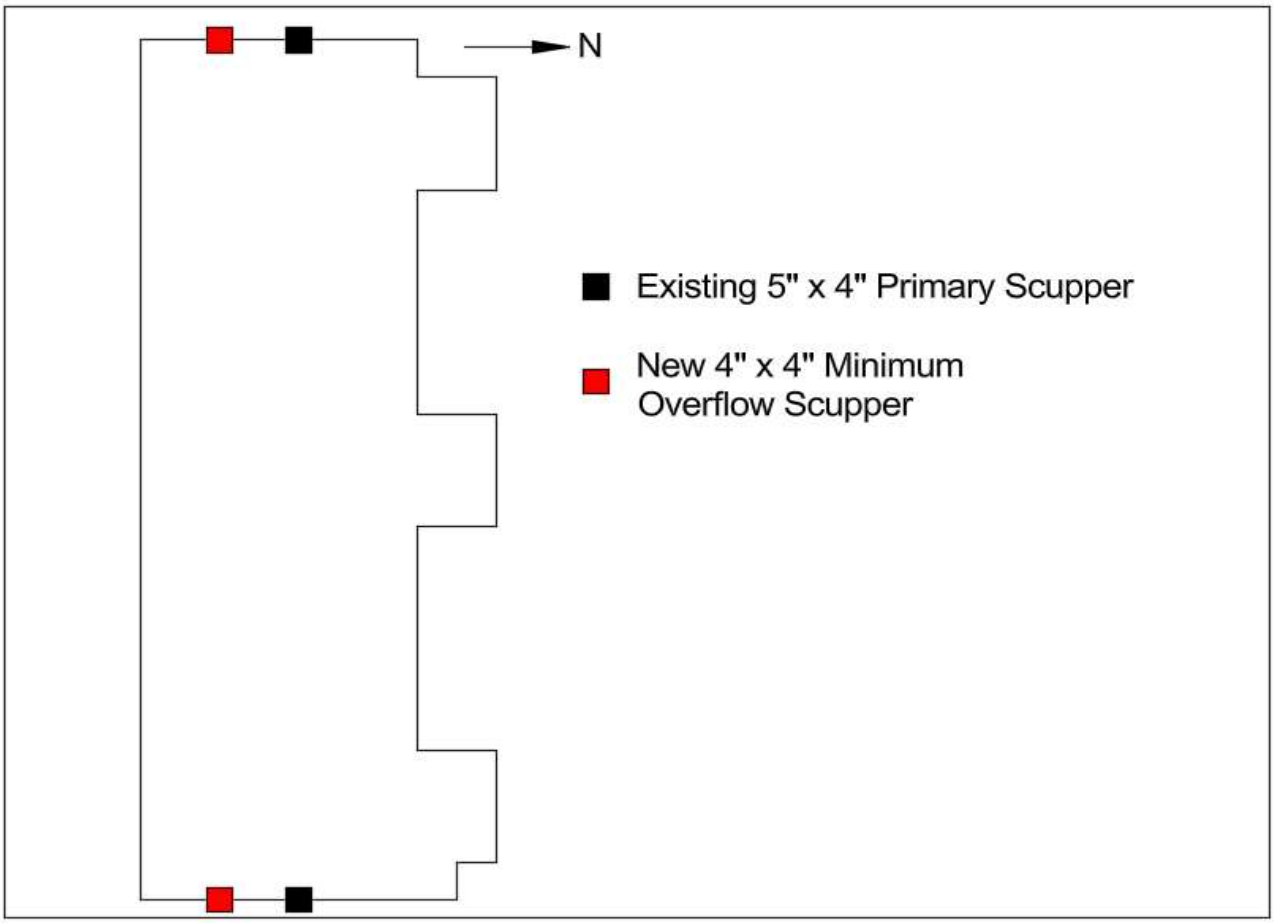

*Note: The drainage plan layout is a suggestion based on information gathered during the survey. As long as the amount and size of drainage components remains consistent with those specified within this report, the locations of new components can be altered to fit requirements the author of this report is not aware of. Ensure all static and hydraulic head conditions are met as specified.

3260 NW 23rd Avenue ~ Suite 300E ~ Pompano Beach, FL 33069 ~ Office 954-978-9330 ~ Fax 954-978-9339
mike@turnkeyroofconsulting.com

General Conditions

SECTION 06105 - MISCELLANEOUS CARPENTRY

PART 1 - GENERAL

1.1 RELATED DOCUMENTS

A. Drawings and general provisions of the Contract, including General and Supplementary Conditions and Division 1 Specification Sections, apply to this Section.

B. SECTION 01 310 PROJECT MANAGEMENT

C. SECTION 01400 QUALITY REQUIREMENTS

D. SECTION 01524 WASTE MANAGEMENT

E. SECTION 07 54 16 SINGLE PLY KEE ROOFING SYSTEMS

F. SECTION 07 56 00 LIQUID APPLIED POLYMETHYL METHACRYLATE (PMMA) FLASHINGS

G. SECTION 07 71 00 ROOF SPECIALTIES

1.2 SUMMARY

A. This Section includes the following:

1. Rooftop equipment bases and support curbs.
2. Wood blocking, cants, and nailers.

1.3 DEFINITIONS

A. Lumber grading agencies, and the abbreviations used to reference them, include the following:

1. NELMA - Northeastern Lumber Manufacturers Association.
2. NLGA - National Lumber Grades Authority.
3. SPIB - Southern Pine Inspection Bureau.
4. WCLIB - West Coast Lumber Inspection Bureau.
5. WWPA - Western Wood Products Association.

1.4 SUBMITTALS

A. Product Data: For each type of process and factory-fabricated product. Indicate component materials and dimensions and include construction and application details.

1. Include data for wood-preservative treatment from chemical treatment manufacturer and certification by treating plant that treated materials comply with requirements. Indicate type of preservative used, net amount of preservative retained, and chemical treatment manufacturer's written instructions for handling, storing, installing, and finishing treated material.
2. Include data for fire-retardant treatment from chemical treatment manufacturer and certification by treating plant that treated materials comply with requirements. Include

physical properties of treated materials, both before and after exposure to elevated temperatures when tested according to ASTM D 5516 and ASTM D 5664.

3. For products receiving waterborne treatment, include statement that moisture content of treated materials was reduced to levels specified before shipment to Project site.
4. Include copies of warranties from chemical treatment manufacturers for each type of treatment.

1.5 DELIVERY, STORAGE, AND HANDLING

A. Stack lumber, plywood, and other panels; place spacers between each bundle to provide air circulation. Provide for air circulation around stacks and under coverings.

PART 2 - PRODUCTS

2.1 WOOD PRODUCTS, GENERAL

A. Lumber: DOC PS 20 and applicable rules of lumber grading agencies certified by the American Lumber Standards Committee Board of Review.

1. Factory mark each piece of lumber with grade stamp of grading agency.
2. For exposed lumber indicated to receive a stained or natural finish, mark grade stamp on end or back of each piece.
3. Where nominal sizes are indicated, provide actual sizes required by DOC PS 20 for moisture content specified. Where actual sizes are indicated, they are minimum dressed sizes for dry lumber.
4. Provide dressed lumber, S4S, unless otherwise indicated.
5. Provide dry lumber with 19 percent maximum moisture content at time of dressing for 2-inch nominal (38-mm actual) thickness or less, unless otherwise indicated.

2.2 WOOD-PRESERVATIVE-TREATED MATERIALS

A. Preservative Treatment by Pressure Process: AWPA C2 (lumber) and AWPA C9 (plywood), except that lumber that is not in contact with the ground and is continuously protected from liquid water may be treated according to AWPA C31 with inorganic boron (SBX).

1. Preservative Chemicals: Acceptable to authorities having jurisdiction and one of the following:

    a. Chromated copper arsenate (CCA).
    b. Ammoniacal copper zinc arsenate (ACZA).
    c. Ammoniacal, or amine, copper quat (ACQ).
    d. Copper bis (dimethyldithiocarbamate) (CDDC).
    e. Ammoniacal copper citrate (CC).
    f. Copper azole, Type A (CBA-A).
    g. Oxine copper (copper-8-quinolinolate) in a light petroleum solvent.

B. Kiln-dry material after treatment to a maximum moisture content of 19 percent for lumber and 15 percent for plywood. Do not use material that is warped or does not comply with requirements for untreated material.

C. Mark each treated item with the treatment quality mark of an inspection agency approved by the American Lumber Standards Committee Board of Review.

1. For exposed lumber indicated to receive a stained or natural finish, mark end or back of each piece.

D. Application: Treat items indicated on Drawings, and the following:

1. Wood cants, nailers, curbs, equipment support bases, blocking, stripping, and similar members in connection with roofing, flashing, vapor barriers, and waterproofing.
2. Wood sills, blocking, and similar concealed members in contact with masonry or concrete.

2.3 MISCELLANEOUS LUMBER

A. General: Provide lumber for support or attachment of other construction, including the following:

1. Rooftop equipment bases and support curbs.
2. Blocking.
3. Cants.
4. Nailers.
5. Furring.
6. Grounds.

B. For items of dimension lumber size, provide Construction, Stud, or No. 2 grade lumber with 15 percent maximum moisture content and any of the following species:

1. Mixed southern pine; SPIB.
2. Eastern softwoods; NELMA.
3. Northern species; NLGA.
4. Western woods; WCLIB or WWPA.

C. For concealed boards, provide lumber with 15 percent maximum moisture content and any of the following species and grades:

1. Mixed southern pine, No. 2 grade; SPIB.
2. Eastern softwoods, No. 2 Common grade; NELMA.
3. Northern species, No. 2 Common grade; NLGA.
4. Western woods, Construction or No. 2 Common grade; WCLIB or WWPA.

2.4 PANEL PRODUCTS

A. Miscellaneous Concealed Plywood: Exterior sheathing, span rating to suit framing in each location, and thickness as indicated but not less than 1/2 inch (13 mm).

B. Miscellaneous Concealed Oriented Strand Board: Exposure 1 sheathing, span rating to suit framing in each location, and thickness as indicated but not less than 1/2 inch (13 mm).

2.5 FASTENERS

A. General: Provide fasteners of size and type indicated that comply with requirements specified in this Article for material and manufacture.

1. Where carpentry is exposed to weather, in ground contact, or in area of high relative humidity, provide fasteners with hot-dip zinc coating complying with ASTM A 153/A 153M or of Type 304 stainless steel.

B. Nails, Wire, Brads, and Staples: FS FF-N-105.

C. Power-Driven Fasteners: CABO NER-272.

D. Wood Screws: ASME B18.6.1.

E. Screws for Fastening to Cold-Formed Metal Framing: ASTM C 954, except with wafer heads and reamer wings, length as recommended by screw manufacturer for material being fastened.

F. Lag Bolts: ASME B18.2.1. (ASME B18.2.3.8M).

G. Bolts: Steel bolts complying with ASTM A 307, Grade A (ASTM F 568M, Property Class 4.6); with ASTM A 563 (ASTM A 563M) hex nuts and, where indicated, flat washers.

H. Expansion Anchors: Anchor bolt and sleeve assembly of material indicated below with capability to sustain, without failure, a load equal to 6 times the load imposed when installed in unit masonry assemblies and equal to 4 times the load imposed when installed in concrete as determined by testing per ASTM E 488 conducted by a qualified independent testing and inspecting agency.
1. Material: Stainless steel with bolts and nuts complying with ASTM F 593 and ASTM F 594, Alloy Group 1 or 2 (ASTM F 738M and ASTM F 836M, Grade A1 or A4).

2.6 METAL FRAMING ANCHORS

A. General: Provide galvanized steel framing anchors of structural capacity, type, and size indicated and acceptable to authorities having jurisdiction.

B. Galvanized Steel Sheet: Hot-dip galvanized after fabrication (ASTM A 153/A 153M) or stainless steel (ASTM A 666, Type 304)

PART 3 - EXECUTION

3.1 INSTALLATION, GENERAL

A. Install additional wood blocking to equipment curbs in order to obtain a minimum of eight (8) inches from the final roof level to the top of the curb.

B. Discard units of material with defects that impair quality of carpentry and that are too small to use with minimum number of joints or optimum joint arrangement.

C. Set carpentry to required levels and lines, with members plumb, true to line, cut, and fitted. Fit carpentry to other constructions; scribe and cope as needed for accurate fit. Locate nailers, blocking, and similar supports to comply with requirements for attaching other construction.

D. Apply field treatment complying with AWPA M4 to cut surfaces of preservative-treated lumber and plywood.

E. Securely attach carpentry work as indicated and according to applicable codes and recognized standards.

F. Countersink fastener heads on exposed carpentry work and fill holes with wood filler.

G. Use fasteners of appropriate type and length. Predrill members when necessary to avoid splitting wood.

3.2 WOOD BLOCKING, AND NAILER INSTALLATION

A. Install where indicated and where required for attaching other work. Form to shapes indicated and cut as required for true line and level of attached work. Coordinate locations with other work involved.

B. Attach items to substrates to support applied loading. Recess bolts and nuts flush with surfaces, unless otherwise indicated.

3.3 PANEL PRODUCT INSTALLATION

A. Wood Structural Panels: Comply with applicable recommendations contained in APA Form No. E30K, "APA Design/Construction Guide: Residential & Commercial," for types of structural-use panels and applications indicated.

END OF SECTION 06105

SECTION 01310 - PROJECT MANAGEMENT AND COORDINATION

PART 1 - GENERAL

1.1 RELATED DOCUMENTS

A. Drawings and general provisions of the Contract, including General and Supplementary Conditions and other Division 1 Specification Sections, apply to this Section.

B. SECTION 01400 QUALITY REQUIREMENTS

C. SECTION 01524 WASTE MANAGEMENT

D. SECTION 06105 MISCELANEOUS CARPENTRY

E. SECTION 07 56 00 LIQUID APPLIED POLYMETHYL METHACRYLATE (PMMA) FLASHINGS

F. SECTION 07 71 00 ROOF SPECIALTIES

1.2 SUMMARY

A. This Section includes administrative provisions for coordinating construction operations on Project including, but not limited to, the following:
   1. Administrative and supervisory personnel.
   2. Project meetings.

1.3 COORDINATION

A. Coordination: Coordinate construction operations included in different Sections of the Specifications to ensure efficient and orderly installation of each part of the Work. Coordinate construction operations, included in different Sections, that depend on each other for proper installation, connection, and operation.

   1. Schedule construction operations in sequence required to obtain the best results where installation of one part of the Work depends on installation of other components, before or after its own installation.
   2. Coordinate installation of different components with other contractors to ensure maximum accessibility for required maintenance, service, and repair.
   3. Make adequate provisions to accommodate items scheduled for later installation.
   4. Where availability of space is limited, coordinate installation of different components to ensure maximum performance and accessibility for required maintenance, service, and repair of all components, including mechanical and electrical.

B. Prepare memoranda for distribution to each party involved, outlining special procedures required for coordination. Include such items as required notices, reports, and list of attendees at meetings.

   1. Prepare similar memoranda for Owner and separate contractors if coordination of their Work is required.

C. Administrative Procedures: Coordinate scheduling and timing of required administrative procedures with other construction activities and activities of other contractors to avoid conflicts and to ensure orderly progress of the Work. Such administrative activities include, but are not limited to, the following:

1. Preparation of Contractor's Construction Schedule.
2. Preparation of the Schedule of Values.
3. Installation and removal of temporary facilities and controls.
4. Delivery and processing of submittals.
5. Progress meetings.
6. Preinstallation conferences.
7. Project closeout activities.
8. Startup and adjustment of systems.
9. Project closeout activities.

1.4 SUBMITTALS

A. Key Personnel Names: Prior to starting construction operations, submit a list of key personnel assignments, including superintendent and other personnel in attendance at the Project site. Identify individuals and their duties and responsibilities; list addresses and telephone numbers, including home and office telephone numbers. Provide names, addresses, and telephone numbers of individuals assigned as standbys in the absence of individuals assigned to Project.

1. Post copies of the list in the Project meeting room, in the temporary field office, and by each temporary telephone. Always keep the list current.

1.5 PROJECT MEETINGS

A. General: Schedule and conduct meetings and conferences at Project site, unless otherwise indicated.

1. Attendees: Inform participants and others involved, and individuals whose presence is required, of the date and time of each meeting. Notify Owner of scheduled meeting dates and times.
2. Agenda: Prepare the meeting agenda. Distribute the agenda to all invited attendees.
3. Minutes: Record significant discussions and agreements achieved. Distribute the meeting minutes to everyone concerned, including Owner, within three days of the meeting.

B. Preconstruction Conference: Roofing consultant will schedule a preconstruction conference before starting construction, at a time convenient to Owner, but no later than 7 days after execution of the Agreement. Hold the conference at the Project site or another convenient location. Conduct the meeting to review responsibilities and personnel assignments.

1. Attendees: Authorized representatives of Owner, Contractor, and its superintendent; major subcontractors; suppliers; and other concerned parties shall attend the conference. All participants at the conference shall be familiar with the Project and authorized to conclude matters relating to the Work.
2. Agenda: Discuss items of significance that could affect progress, including the following:

    a. Construction schedule.
    b. Critical work sequencing and long-lead items.
    c. Designation of key personnel and their duties.

d. Procedures for processing field decisions and Change Orders.
e. Procedures for requests for interpretations (RFIs).
f. Procedures for testing and inspecting.
g. Procedures for processing Applications for Payment.
h. Distribution of the Contract Documents.
i. Submittal procedures.
j. Preparation of Record Documents.
k. Use of the premises and existing building.
l. Work restrictions.
m. Owner's occupancy requirements.
n. Responsibility for temporary facilities and controls.
o. Construction waste management and recycling.
p. Parking availability.
q. Office, work, and storage areas.
r. Equipment deliveries and priorities.
s. First aid.
t. Security.
u. Progress cleaning.
v. Working hours.

3. Minutes: Roofing Consultant will record and distribute meeting minutes.

C. Progress Meetings: Roofing Consultant will conduct progress meetings at weekly intervals. Coordinate dates of meetings with preparation of payment requests.

1. Attendees: In addition to representatives of Owner, each contractor, subcontractor, supplier, and other entity concerned with current progress or involved in planning, coordination, or performance of future activities shall be represented at these meetings. All participants at the conference shall be familiar with the Project and authorized to conclude matters relating to the Work.
2. Agenda: Review and correct or approve minutes of previous progress meeting. Review other items of significance that could affect progress. Include topics for discussion as appropriate to status of Project.

a. Contractor's Construction Schedule: Review progress since the last meeting. Determine whether each activity is on time, ahead of schedule, or behind schedule, in relation to Contractor's Construction Schedule. Determine how construction behind schedule will be expedited; secure commitments from parties involved to do so. Discuss whether schedule revisions are required to ensure that current and subsequent activities will be completed within the Contract Time.

1) Review schedule for next period.

b. Review present and future needs of each entity present, including the following:

1) Interface requirements.
2) Sequence of operations.
3) Status of submittals.
4) Deliveries.
5) Off-site fabrication.
6) Access.
7) Site utilization.
8) Temporary facilities and controls.
9) Work hours.
10) Hazards and risks.
11) Progress cleaning.

12) Quality and work standards.
13) Status of correction of deficient items.
14) Field observations.
15) Requests for interpretations (RFIs).
16) Status of proposal requests.
17) Pending changes.
18) Status of Change Orders.
19) Pending claims and disputes.
20) Documentation of information for payment requests.

3. Minutes: Record and distribute to the Contractor the meeting minutes.
4. Reporting: Distribute minutes of the meeting to each party present and to parties who should have been present.

    a. Schedule Updating: Revise Contractor's Construction Schedule after each progress meeting where revisions to the schedule have been made or recognized. Issue revised schedule concurrently with the report of each meeting.

PART 2 - PRODUCTS (Not Used)

PART 3 - EXECUTION (Not Used)

END OF SECTION 01310

SECTION 01400 - QUALITY REQUIREMENTS

PART 1 - GENERAL

1.1 RELATED DOCUMENTS

A. Drawings and general provisions of the Contract, including General and Supplementary Conditions and other Division 1 Specification Sections, apply to this Section.

B. SECTION 01 310 PROJECT MANAGEMENT

C. SECTION 01524 WASTE MANAGEMENT

D. SECTION 06105 MISCELANEOUS CARPENTRY

E. SECTION 07 54 16 SINGLE PLY KEE ROOFING SYSTEMS

F. SECTION 07 56 00 LIQUID APPLIED POLYMETHYL METHACRYLATE (PMMA) FLASHINGS

G. SECTION 07 71 00 ROOF SPECIALTIES

1.2 SUMMARY

A. This Section includes administrative and procedural requirements for quality assurance and quality control.

B. Testing and inspecting services are required to verify compliance with requirements specified or indicated. These services do not relieve Contractor of responsibility for compliance with the Contract Document requirements.

1. Specific quality-assurance and -control requirements for individual construction activities are specified in the Sections that specify those activities. Requirements in those Sections may also cover production of standard products.
2. Specified tests, inspections, and related actions do not limit Contractor's other quality-assurance and -control procedures that facilitate compliance with the Contract Document requirements.
3. Requirements for Contractor to provide quality-assurance and -control services required by Owner, Owner, or authorities having jurisdiction are not limited by provisions of this Section.

1.3 DEFINITIONS

A. Quality-Assurance Services: Activities, actions, and procedures performed before and during execution of the Work to guard against defects and deficiencies and substantiate that proposed construction will comply with requirements.

B. Quality-Control Services: Tests, inspections, procedures, and related actions during and after execution of the Work to evaluate that actual products incorporated into the Work and completed construction comply with requirements. Services do not include contract enforcement activities performed by Owner.

C. Preconstruction Testing: Tests and inspections that are performed specifically for the Project before products and materials are incorporated into the Work to verify performance or compliance with specified criteria.

D. Product Testing: Tests and inspections that are performed by an NRTL, an NVLAP, or a testing agency qualified to conduct product testing and acceptable to authorities having jurisdiction, to establish product performance and compliance with industry standards.

E. Source Quality-Control Testing: Tests and inspections that are performed at the source, i.e., plant, mill, factory, or shop.

F. Field Quality-Control Testing: Tests and inspections that are performed on-site for installation of the Work and for completed Work.

G. Testing Agency: An entity engaged to perform specific tests, inspections, or both. Testing laboratory shall mean the same as testing agency.

H. Installer/Applicator/Erector: Contractor or another entity engaged by Contractor as an employee, Subcontractor, or Sub-subcontractor, to perform a particular construction operation, including installation, erection, application, and similar operations.

1. Using a term such as "carpentry" does not imply that certain construction activities must be performed by accredited or unionized individuals of a corresponding generic name, such as "carpenter." It also does not imply that requirements specified apply exclusively to tradespeople of the corresponding generic name.

I. Experienced: When used with an entity, "experienced" means having successfully completed a minimum of five previous projects similar in size and scope to this Project; being familiar with special requirements indicated; and having complied with requirements of authorities having jurisdiction.

1.4 CONFLICTING REQUIREMENTS

A. General: If compliance with two or more standards is specified and the standards establish different or conflicting requirements for minimum quantities or quality levels, comply with the most stringent requirement. Refer uncertainties and requirements that are different, but apparently equal, to Owner for a decision before proceeding.

B. Minimum Quantity or Quality Levels: The quantity or quality level shown or specified shall be the minimum provided or performed. The actual installation may comply exactly with the minimum quantity or quality specified, or it may exceed the minimum within reasonable limits. To comply with these requirements, indicated numeric values are minimum or maximum, as appropriate, for the context of requirements. Refer uncertainties to Owner for a decision before proceeding.

1.5 SUBMITTALS

A. Qualification Data: For testing agencies specified in "Quality Assurance" Article to demonstrate their capabilities and experience. Include proof of qualifications in the form of a recent report on the inspection of the testing agency by a recognized authority.

B. Reports: Prepare and submit certified written reports that include the following:

1. Date of issue.
2. Project title and number.
3. Name, address, and telephone number of testing agency.
4. Dates and locations of samples and tests or inspections.
5. Names of individuals doing tests and inspections.
6. Description of the Work and test and inspection method.
7. Identification of product and Specification Section.
8. Complete test or inspection data.
9. Test and inspection results and an interpretation of test results.
10. Record of temperature and weather conditions at time of sample taking and testing and inspecting.
11. Comments or professional opinion on whether tested or inspected Work complies with the Contract Document requirements.
12. Name and signature of laboratory inspector.
13. Recommendations on retesting and reinspecting.

C. Permits, Licenses, and Certificates: For Owner's records, submit copies of permits, licenses, certifications, inspection reports, releases, jurisdictional settlements, notices, receipts for fee payments, judgments, correspondence, records, and similar documents, established for compliance with standards and regulations bearing on performance of the Work.

D. Letter of Intent to Issue a Warranty by the roofing system manufacturer. Submit a copy with Bid Form stating the system to be used and the approval of the contractor to install such system.

1.6 QUALITY ASSURANCE

A. General: Qualifications paragraphs in this Article establish the minimum qualification levels required; individual Specification Sections specify additional requirements.

B. Installer Qualifications: A firm or individual certified by manufacturer in installing, erecting, or assembling work similar in material, design, and extent to that indicated for this Project, whose work has resulted in construction with a record of successful in-service performance. Installer employing workers trained and approved by manufacturer

C. Manufacturer Qualifications: A firm experienced in manufacturing products or systems similar to those indicated for this Project and with a record of successful in-service performance, as well as sufficient production capacity to produce the required units. The manufacturer should have an ISO 9000 Certification.

D. Fabricator Qualifications: A firm experienced in producing products similar to those indicated for this Project and with a record of successful in-service performance, as well as sufficient production capacity to produce the required units.

E. Testing Agency Qualifications: An NRTL, an NVLAP, or an independent agency with the experience and capability to conduct testing and inspecting indicated, as documented according to ASTM E 548; and with additional qualifications specified in individual Sections; and where required by authorities having jurisdiction, that is acceptable to authorities.

1. NRTL: A nationally recognized testing laboratory according to 29 CFR 1910.7.
2. NVLAP: A testing agency accredited according to NIST's National Voluntary Laboratory Accreditation Program.

F. Factory-Authorized Technical Representative Qualifications: An authorized, full-time technical specialist employee representative of manufacturer who is trained and approved by

manufacturer to observe and inspect installation of roofing systems that are similar in material, design, and extent to those indicated for this Project.

G. Roof Consultant Technical Representative Qualifications: An authorized, full-time technical specialist employee representative of the roof consultant who is trained to observe and inspect installation of roofing systems that are similar in material, design, and extent to those indicated for this Project.

1.7 QUALITY CONTROL

A. Tests and inspections not explicitly assigned to Owner are Contractor's responsibility. Unless otherwise indicated, provide quality-control services specified and those required by authorities having jurisdiction. Perform quality-control services required of Contractor by authorities having jurisdiction, whether specified or not.

1. Where services are indicated as the Contractor's responsibility, engage a qualified testing agency to perform these quality-control services.

    a. Contractor shall not employ same entity engaged by Owner, unless agreed to in writing by Owner.

2. Notify testing agencies at least 24 hours in advance of time when Work that requires testing or inspecting will be performed.
3. Where quality-control services are indicated as Contractor's responsibility, submit a certified written report, in duplicate, of each quality-control service.
4. Testing and inspecting requested by Contractor and not required by the Contract Documents are Contractor's responsibility.
5. Submit additional copies of each written report directly to authorities having jurisdiction, when they so direct.

B. Manufacturer's Field Services: Engage a manufacturer-authorized technical representative to inspect field-assembled components at least three times throughout the duration of the project and submit field reports results in writing.

C. Retesting/Reinspecting: Provide quality-control services, including retesting and reinspecting, for construction that replaced Work that failed to comply with the Contract Documents.

D. Roof Consultant's Responsibilities: Cooperate with Owner and Contractor in performance of duties. Provide qualified personnel to perform required tests and inspections.

1. Notify Owner and Contractor promptly of irregularities or deficiencies observed in the Work during performance of its services.
2. Conduct and interpret tests and inspections and state in each report whether tested and inspected work complies with or deviates from requirements.
3. Submit a written report inspection, and similar quality-control service.
4. Do not perform any duties of Contractor.

E. Associated Services: Cooperate with agencies performing required tests, inspections, and similar quality-control services, and provide reasonable auxiliary services as requested. Notify agency sufficiently in advance of operations to permit assignment of personnel. Provide the following:

1. Access to the Work.

2. Incidental labor and facilities necessary to facilitate tests and inspections, including minor cutting and patching.
3. Adequate quantities of representative samples of materials that require testing and inspecting. Assist agency in obtaining samples.
4. Facilities for storage of test samples.
5. Security and protection for samples and for testing and inspecting equipment at Project site.

F. Coordination: Coordinate sequence of activities to accommodate required quality-assurance and -control services with a minimum of delay and to avoid necessity of removing and replacing construction to accommodate testing and inspecting.

1. Schedule times for tests, inspections, obtaining samples, and similar activities.

PART 2 - PRODUCTS (Not Used)

PART 3 - EXECUTION

3.1 TEST AND INSPECTION LOG

A. Prepare a record of tests and inspections. Include the following:

1. Date test or inspection was conducted.
2. Description of the Work tested or inspected.
3. Date test or inspection results were transmitted to Owner.
4. Identification of testing agency or special inspector conducting test or inspection.

B. Maintain log at Project site. Post changes and modifications as they occur. Provide access to test and inspection log for Owner's reference during normal working hours.

3.2 REPAIR AND PROTECTION

A. General: On completion of testing, inspecting, sample taking, and similar services, repair damaged construction and restore substrates and finishes.

B. Protect construction exposed by or for quality-control service activities.

C. Repair and protection are the Contractor’s responsibility, regardless of the assignment of responsibility for quality-control services.

END OF SECTION 01400

SECTION 07 71 00 ROOF SPECIALTIES

Part 1 GENERAL

1.1 SECTION INCLUDES

A. Fascia
B. Coping Cap
C. Counter Flashings
D. Expansion Joint Cap

1.2 RELATED REQUIREMENTS

A. Section 07 54 16 – Single Ply KEE Roofing Systems

1.3 REFERENCE STANDARDS

A. Factory Mutual (FM Global):
   1. FM 1-49
B. Single Ply Roofing Industry (SPRI):
   1. ANSI/SPRI/FM 4435/ES-1 – Wind Design Standard for Edge Systems Used with Low Slope Roofing Systems. RE-1, RE-2 and RE-3 Test.
C. International Building Code (IBC):
   1. Chapter 15, Section 1504.6 Edge Securement for low-slope roofs. **(2021 IBC)**
   2. Chapter 15, Section 1504.6.1 Gutter Securement for low-slope roofs. **(2021 IBC)**
   3. Designed and installed for wind loads in accordance with Chapter
D. American Society of Civil Engineers (ASCE-7) Minimum Design Loads for Buildings & Other Structures
   1. Chapter 26, Wind Loads: General Requirements
   2. Chapter 30, Wind Loads: Components and Cladding
E. Miami-Dade County, Florida Notice of Acceptance (NOA)
F. Roof Application Standard (RAS) 111 - Standard Requirements for Attachment of Perimeter Wood Blocking and Metal Flashing

1.4 PREINSTALLATION MEETINGS

A. Convene preinstallation meeting two (2) weeks before start of installation of materials.

B. Require attendance of parties directly affecting Work of this Section, including Contractor, Architect, installer, and manufacturer's representative.

C. Review the Following:
1. Materials.
2. Installation.
3. Adjusting.
4. Cleaning.
5. Protection.
6. Coordination with other Work.

1.5 SUBMITTALS

A Comply with Division 01.

B Product Data: Submit manufacturer's product data, including installation instructions.

C Shop Drawings: Submit manufacturer's shop drawings, including plans, elevations, sections, and details, indicating dimensions, materials, components, fasteners, finish, and accessories.

D. Samples: Submit manufacturer's sample of materials.
1. Sample Length: Minimum five (5) inches.

E. Color Samples: Submit manufacturer's color samples of materials, consisting of complete color chart representing manufacturer's full range of available colors.
1. Submit metal chips of specific colors as requested by the Architect.

F. Manufacturer's Certification: Submit manufacturer's certification that materials comply with specified requirements and are suitable for intended application.

G. Warranty Documentation: Submit roofing membrane manufacturer's standard warranty.

1.6 QUALITY ASSURANCE

A. Manufacturer Qualifications: A qualified manufacturer offering products meeting requirements that are ANSI/SPRI FM4435 ES -1 tested. Manufacturer regularly engaged in the manufacturing of materials of similar type to that specified for a minimum of ten (10) years. Products shall be manufactured in specified manufacturer's facilities. Products fabricated by installer or other fabricator will not be acceptable unless fabricator can demonstrate to Architect's satisfaction that products have been tested and passed SPRI RE-1, RE-2 and RE-3 Wind Design Standard and meet specified design pressures for perimeter and corner zones.

B. Installer's Qualifications
1. Installer regularly engaged in installation of materials of similar type to that specified for a minimum of five (5) years.
2. Use persons trained for installation of materials of similar type to that specified following manufacturer's installation instructions.

C. Testing: Meet specified testing requirements.

1.7 DELIVERY, STORAGE, AND HANDLING

A. Delivery Requirements: Deliver materials to site in manufacturer's original, unopened containers and packaging.

B. Storage and Handling Requirements:
1. Store and handle materials in accordance with manufacturer's instructions.
2. Keep materials in manufacturer's original, unopened containers and packaging until installation.
3. Store materials in clean, dry area indoors.
4. Do not store materials directly on floor or ground.
5. Protect materials and finish during storage, handling, and installation to prevent damage.

1.8 WARRANTY

A. Warranty Period, Product:
1. Twenty (20) years provided by the Manufacturer of the roofing membrane as a Full System twenty (20) Year NDL Warranty

B. Warranty Period, Finish:
1. Limited 30-year warranty for prefinished coil-coated steel and aluminum coated with Kynar 500 standard colors covering fade, chalk, and film integrity.

PART 2 – PRODUCTS

2.1 MANUFACTURERS

A. Manufacturer: FiberTite, provided by Seaman Corporation.

B. Substitutions: Manufacturer must comply in all respects to the specified roofing assemblies, ES-1 standards and local building code to be considered for equivalency.

C. Requests for substitutions will be considered in accordance with the provisions of this Section and Product Requirements.

2.2 PRODUCTS

A. Fascia: FiberTite Anchor-Tite standard fascia, fully adhered or mechanically attached, single-ply version.
   1. Four (4) inch face height or five and one-half (5 ½) inch face height to accommodate for the added wood nailers at the perimeter as a result of the tapered insulation system design.
   2. Cover Material: 0.040-inch aluminum.
   3. Anchor Bar: Stainless steel or aluminum according to RAS-111.
   4. Formed Lengths: 12’-0”.
   5. Slotted Fastening Holes: 12 inches on center.
   6. Anchor Bar Splice Plates: EPDM.

B. Counterflashings: FiberTite Standard Counterflashings.
   1. Material: .040 Aluminum, standard Color
   2. Maximum Formed Lengths: 12’-0”.

C. Coping Cap: FiberTite Coping Cap
   1. Cover Material: .040 Aluminum, standard color.
   2. Maximum Formed Lengths: 12’-0”.
   3. Cleats: Stainless steel or Aluminum according to RAS-111.

D. Expansion Joint: FiberTite Expansion Joint Cap
   4. Cover Material: .040 Aluminum, standard color.
   5. Maximum Formed Lengths: 12’-0”.
   6. Cleats: Stainless steel or Aluminum according to RAS-111.

2.3 FINISHES

   1. Finish: Kynar 500
   2. Color: Selected by Owner’s Representative from Standard Color Chart.

2.4 ACCESSORIES

A. Factory-Fabricated Accessories, with Dimensions according to shop drawings
   1. Miters:
      a. Outside Miters.
         Inside Miters.
   2. Endcaps:
      a. Right endcaps.
      b. Left endcaps.

3. Endwall Flashings:
    a. Right endwall flashings.
    b. Left endwall flashings.

Part 3 EXECUTION

3.1 EXAMINATION

A. Examine areas to receive materials.

B. Verify surfaces to support materials are clean, dry, straight, secure, and of proper dimensions.

C. Notify Architect of conditions that would adversely affect installation.

D. Do not begin installation until unacceptable conditions are corrected.

3.2 INSTALLATION

A. Install materials in accordance with manufacturer's instructions at locations indicated on the Drawings.

B. Remove protective vinyl film immediately before installation.

C. Install materials to provide watertight termination at leading edge of roofing material.

D. Install materials to allow for thermal movement.

E. Joint Sealants: Apply joint sealants in accordance with manufacturer's instructions.

3.3 ADJUSTING

A. Repair minor damages to finish in accordance with manufacturer's instructions and as approved by Architect.

B. Remove and replace with new material, damaged components that cannot be successfully repaired, as determined by Architect.

3.4 CLEANING

A. Clean materials promptly after installation in accordance with manufacturer's instructions.

B. Do not use harsh cleaning materials or methods that could damage the finish.

3.5 PROTECTION

A. Protect installed materials to ensure that, except for normal weathering, materials will be without damage or deterioration at time of Substantial Completion.

END OF SECTION 07 71 00

SECTION 01524 - CONSTRUCTION WASTE MANAGEMENT

PART 1 - GENERAL

1.1 RELATED DOCUMENTS

A. Drawings and general provisions of the Contract, including General and Supplementary Conditions and Division 1 Specification Sections, apply to this Section.

B. SECTION 01 310 PROJECT MANAGEMENT

C. SECTION 01400 QUALITY REQUIREMENTS

D. SECTION 06105 MISCELANEOUS CARPENTRY

E. SECTION 07 54 16 SINGLE PLY KEE ROOFING SYSTEMS

F. SECTION 07 56 00 LIQUID APPLIED POLYMETHYL METHACRYLATE (PMMA) FLASHINGS

G. SECTION 07 71 00 ROOF SPECIALTIES

1.2 SUMMARY

A. This Section includes administrative and procedural requirements for the following:
   1. Disposing of non-hazardous demolition and construction waste.

1.3 DEFINITIONS

A. Construction Waste: Building and site improvement materials and other solid waste resulting from construction, remodeling, renovation, or repair operations. Construction waste includes packaging.

B. Demolition Waste: Building and site improvement materials resulting from demolition or selective demolition operations.

C. Disposal: Removal off-site of demolition and construction waste and subsequent sale, recycling, reuse, or deposit in landfill or incinerator acceptable to authorities having jurisdiction.

1.4 SUBMITTALS

A. Waste Management Plan: Submit plan within 7 days of date established for commencement of the Work.

1.5 WASTE MANAGEMENT PLAN

A. General: Develop plan consisting of waste identification, waste reduction work plan, and cost/revenue analysis. Include separate sections in the plan for demolition and construction waste. Indicate quantities by weight or volume but use same units of measure throughout waste management plan.

B. Waste Identification: Indicate anticipated types and quantities of demolition waste generated by the Work. Include estimated quantities and assumptions for estimates.

PART 2 - PRODUCTS (Not Used)

PART 3 - EXECUTION

3.1 PLAN IMPLEMENTATION

A. General: Implement waste management plan as approved by Owner. Provide handling, containers, storage, signage, transportation, and other items as required to implement waste management plan during the entire duration of the Contract.

1. Comply with Division 1 Section "Temporary Facilities and Controls" for operation, termination, and removal requirements.

B. Waste Management Coordinator: Engage a waste management coordinator to be responsible for implementing, monitoring, and reporting status of waste management work plan. Coordinator shall be present at Project site full time for duration of Project.

C. Training: Train workers, subcontractors, and suppliers on proper waste management procedures, as appropriate for the Work occurring at Project site.

1. Distribute waste management plan to everyone concerned within three days of submittal return.
2. Distribute waste management plans to entities when they first begin work on-site. Review plan procedures and locations established for salvage, recycling, and disposal.

D. Site Access and Temporary Controls: Conduct waste management operations to ensure minimum interference with roads, streets, walks, walkways, and other adjacent occupied and used facilities.

1. Designate and label specific areas on Project site necessary for separating materials that are to be salvaged, recycled, reused, donated, and sold.
2. Comply with Division 1 Section "Temporary Facilities and Controls" for controlling dust and dirt, environmental protection, and noise control.

3.2 DISPOSAL OF WASTE

A. General: Except for items or materials to be salvaged, recycled, or otherwise reused, remove waste materials from Project site and legally dispose of them in a landfill or incinerator acceptable to authorities having jurisdiction.

1. Except as otherwise specified, do not allow waste materials that are to be disposed of to accumulate on-site.
2. Remove and transport debris in a manner that will prevent spillage on adjacent surfaces and areas.

B. Burning: Do not burn waste materials.

C. Disposal: Transport waste materials off Owner's property and legally dispose of them.

END OF SECTION 01524